DICKINSON COUNTY RECREATION PLAN 2020 – 2024

Prepared by: Dickinson County Parks Committee and Dickinson County Planning Commission

TABLE OF CONTENTS

1.0 COMMUNITY DESCRIPTION 4

2.0 ADMINISTRATIVE STRUCTURE 5

2.1 Organizational Structure 5

2.1.1 Parks Committee 6
2.1.2 Fumee Lake Commission 6
2.1.3 Dickinson County Planning Commission 6
2.1.4 Park Operations Staff 6
2.1.5 Volunteers 6

2.2 Recreation Budget 7

2.2.1 Recreation Operating Budget 7
2.2.2 Fumee Lake Trust Fund 7
2.2.3 Previous Budget Totals 7
2.2.4 Funding Sources 7
2.2.5 Fiver Year Budget Projections 7

3.0 RECREATION INVENTORY 8

3.1 County Recreation Facilities 8
3.2 Other Recreation Sites Located Within the County 13

4.0 RESOURCE INVENTORY 23

4.1 Topography 23
4.2 Scenic Sites 24
4.3 Soils 28
4.4 Water Features 30
4.5 Climate 30

5.0 DESCRIPTION OF THE PLANNING PROCESS 30

5.1 Planning Data 30
5.1.1 Population 30
5.1.2 Age Distribution 32
5.1.3 Gender 33
5.1.4 Disability 33
5.1.5 Unemployment 33
5.1.6 Economic Characteristics 33
5.1.7 Land Use 36
5.1.8 Local Transportation System 37
5.2 Planning Method 40
5.3 Park Accessibility 42

6.0 DESCRIPTION OF THE PUBLIC INPUT PROCESS 45

6.1 Recreation Needs Assessment 46
6.2 Specific Recreation Facility Needs 46

7.0 GOALS AND OBJECTIVES 47

8.0 ACTION PROGRAM 48

8.1 Recreation Development Schedule 48

APPENDIX A Dickinson County Bike Path Trail Map 51

APPENDIX B U.S. Forest Service Outdoor Recreation Accessibility Guidelines 52

APPENDIX C Public Survey Results 53

APPENDIX D Notices 54

APPENDIX E Meeting Minutes and Resolution of Adoption 55

APPENDIX F Letters of Transmittal 56

1.0 COMMUNITY DESCRIPTION

Dickinson County is a 766.4 square mile parcel of land located in the south-central portion of the Upper Peninsula of Michigan. The County was formed in 1891 on the prosperity and growth of iron ore mining along the Menominee Iron Range. The seat of the County is the City of Iron Mountain, which is located about 52 miles west of the City of Escanaba and about 80 miles southwest of the City of Marquette. This community, like most in the County, was established and settled during the rise of iron ore mining on the Menominee Iron Range in the late 1800s.

The Dickinson County 5-year Recreation Plan is presented to serve several useful purposes. It should serve as (1) a source of information, (2) a guide for correcting deficiencies, (3) an indicator of goals and policies, (4) a framework for making decisions, and (5) a means of stimulating public interest and participation in local community recreation progress.

The County's Parks Committee shapes and guides recreation decisions as they are made by the County Board of Commissioners. The Committee has been actively involved with developing site plans for local parks and recreation areas through the process of interacting with local recreation associations to determine the recreation needs of the County.

The draft plan was prepared jointly by the County's Parks Committee, County Planning Commission, Parks Manager, and County Controller with technical assistance from the Central Upper Peninsula Planning and Development Regional Commission. The work of the Parks Committee provides the foundation for County action to improve the quality and quantity of recreation opportunities in Dickinson County.

A continuous review or revision of this Recreation Plan and its themes will be necessary to make the plan relevant in light of our changing community. However, modification and periodic revision will have to be tempered with common sense and a thorough review of conditions as they change. Our local recreation planning effort must also be coordinated with the planning being done by cities and townships within the County and agencies affecting the County. Coordinating and relating recreation planning to other levels of government does not necessarily mean that the plans at all levels will, or necessarily should, amicably intercept at all points. A two-way avenue of communication must be maintained to avoid duplication or the omission of factors concerning others.

The Recreation Plan for Dickinson County is a glimpse into the future about how the County can develop its recreation system over the next five years. In order to achieve the desired community goals, set forth in this plan, the citizens should take an active role in County affairs.

Finally, this plan should be unique because it would encourage community leaders and the public to be active participants. The development of areas and facilities should be based on the kind of programs needed, not on former plans, social groupings, or personal preferences.

This plan will be adopted by the Dickinson County Board of Commissioners at their regular meeting scheduled for May 26, 2020. Change After Meeting

A copy of this plan is on file with the CUPPAD Regional Planning Commission.

2.0 ADMINISTRATIVE STRUCTURE

2.1 Organizational Structure

Under 1965 Public Act 261, the Dickinson County Parks System is governed by the Dickinson County Board of Commissioners. The Board establishes all park related policies, approves the overall park budget and appropriates necessary operating and capital funds. Figure 2.1 illustrates the organizational structure of the Dickinson County Parks System.

Figure 2.1

Organizational Structure

Dickinson County Parks System

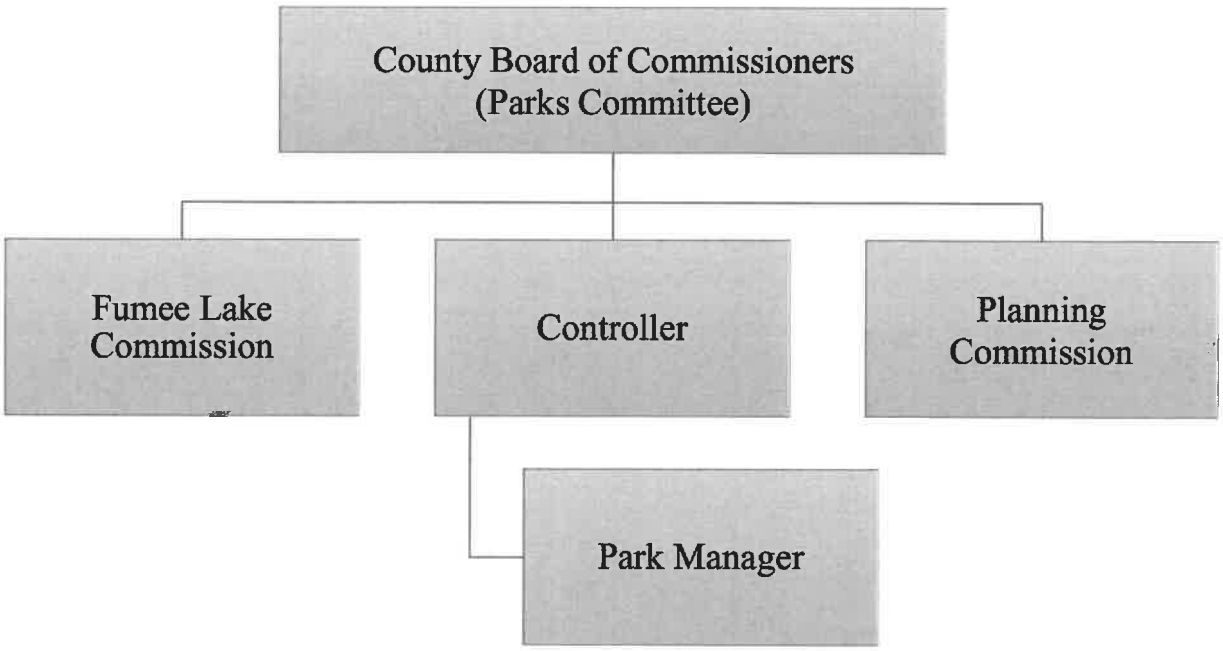

In addition to the County Board of Commissioners, the Parks Committee, Planning Commission, County Controller/Administrator, Parks Manager and support staff, the Fumee Lake Commission and the public all impact policy and the day-to-day operations of the County's park and recreation facilities.

2.1.1 Parks Committee

The Parks Committee is actually a Committee of the Whole of the County Board of Commissioners. The Parks Committee suggests policy relating to parks operations in addition to reviewing and recommending appropriations related to the County Parks Fund.

2.1.2 Fumee Lake Commission

The Fumee Lake Commission, a 501 (c) 3 non-profit corporation, provides general oversight of the County-owned Fumee Lake Natural Area. Composed of seven "conservation minded persons" the Fumee Lake Commission is appointed by the Board of Commissioners.

2.1.3 Dickinson County Planning Commission

The Dickinson County Planning Commission develops and recommends policy relating to recreational and other land uses and capital expenditures. An example of input from the Planning Commission involving recreation includes the development of land use policies for the Badwater Recreation Area and the County Bike Path.

2.1.4 Park Operations Staff

While the Dickinson County Board of Commissioners creates policy and appropriates monies for the County's recreational facilities, their actual operation is the responsibility of professional staff members who are employed by the Board. The people primarily accountable for the operation of the parks are the County Controller, who carries out the County Board's overall fiscal policies, and the Parks Manager, who, except for general supervision from the Controller, manages the outdoor recreational facilities.

The Parks Manager supervises a seasonal (June to September) staff that maintains and operates the outdoor recreation facilities including campgrounds and park. The seasonal crew includes buildings and grounds crew as well as office crew. The office crew will over see the park store and take reservations.

2.1.5 Volunteers

The County does not currently maintain a formal relationship with any volunteer groups, the school districts or other public agencies, but is seeking a partnership with the local Conservation District to collaborate on programming, natural plantings and event planning.

2.2 Recreation Budget

2.2.1 Recreation Operating Budget

The County Controller, with consultation from the Parks Manager, prepares the initial recreation operating budget. The budget is then reviewed by the Parks and Finance committees, who are both Committees of the Whole. Final adoption of the recreation budget does not occur until a public hearing has been held by the County Board on the entire budget for the County. A separate hearing on the recreation operating budget is not normally held.

2.2.2 Fumee Lake Trust Fund

The Fumee Lake Commission oversees the Fumee Lake Trust Fund which generates interest income used to provide for the operational expenses of the Fumee Lake Natural Area. This fund is included as a fiduciary fund within the overall County budget.

2.2.3 Previous Budget Totals

The County appropriated a total of $229,426 in the last five years to the park system.

	Parks Budget:	County Appropriation:
2016	$152,797	$95,000
2017	$133,487	$46,389
2018	$121,801	$20,975
2019	$156,597	$22,062
2020	$181,921	$45,000

2.2.4 Funding Sources

The County primarily uses general funds and camping fees to accomplish their recreation activities and capital improvements throughout their County Parks System. Out of these funds, the County may make a contribution to the Lake Antoine Lake Association which has formulated and implemented a plan to control aquatic invasive species.

2.2.5 Five Year Budget Projections

Dickinson County has forecasted a budget of $250,000 for recreation for the next five years.

3.0 RECREATION INVENTORY

3.1 County Recreation Facilities

From a recreation standpoint, it is important the County provides a broad range of opportunities for its local citizens, as well as tourists. When identifying existing facilities, it helps to understand the types of facilities present. The different categories of recreational facilities are explained below.

Regional Park/Recreation Area: Area of natural or ornamental quality for outdoor recreation, such as picnicking, boating, fishing, swimming, camping, and trail uses. May include play areas.

Community Park/Recreation Area: Area of diverse environmental quality. May include areas suited for intense recreational facilities such as athletic complexes and large swimming pools. May be an area of natural quality for outdoor recreation such as walking, bicycling, skiing, snowshoeing, viewing, sitting, and picnicking.

Mini-Park: Site of specialized facilities that serve a concentrated or limited population or specific group such as tots or the elderly.

Neighborhood Park/Playground: An active recreation site incorporating one or more open space areas designed for field sport and providing play apparatuses. The open space areas should be able to serve the needs of both youth and adults.

Each park facility has also been rated for its accessibility according to the following scale taken from the *Michigan DNR Guidelines for the Development of Community Park, Recreation, Open Space and Greenway Plans*:

1 = none of the facilities/park areas meet accessibility guidelines

2 = some of the facilities/park areas meet accessibility guidelines

3 = most of the facilities/park areas meet accessibility guidelines

4 = the entire park meets accessibility guidelines

5 = the entire park was developed/renovated using the principles of universal design

Dickinson County has a total of ten outdoor recreation sites within its park system. The sites provide a wide spectrum of recreational opportunities that County residents can enjoy year-round.

1. Lake Antoine Park: This 51-acre regional park is located in Breitung Township, just east of the City of Iron Mountain, along the east shore of 748-acre Lake Antoine. The park is the only recreational site within the county's park system under the direct jurisdiction of the Dickinson County Board of Commissioners. It is an access point for

individuals using Lake Antoine for swimming, fishing, water skiing, and other water-related activities and a very popular recreational area and campground for County residents and visitors alike. It is managed by one permanent full-time employee, and operated with the assistance of two county employees. Seasonal employees are utilized during the summer months. Daily camping fees are $20 for County residents and $24 for non-residents. Facilities include:

- □2 Picnic Shelters/Pavilions
- □600+ Parking Spaces
- □Playground Equipment
- □Softball Field
- □Multi-Purpose Open Field
- □Boat Fishing
- □Dumping Station
- □Honey Wagon
- □Nature Trail
- □2 Sand Volleyball Courts
- □3 Horseshoe Pits
- □3,000 Feet of Buoyed Swimming Beach
- □Wheelchair Ramp-Accessible Swimming Beach
- □110 Picnic Tables, some Wheelchair Accessible
- □Bike, Paddle Board and Kayak Rentals (private vendor contract)
- □90 Modern Camping Sites
- □Wi-fi Internet Access
- □Tot Lot
- □5,000 Feet Waterfront
- □Boat Launch
- □Showers/Flush toilets
- □Bathhouse Dumping Station
- □Security Gates
- □Camp Store
- □Permanent Band Shell
- □Weekend Security
- □Locally-cut Firewood

In 2017, Lake Antoine Park Partners (LAPP), a 501(c) 3 was organized to "preserve, improve, promote, and protect Lake Antoine Park for use and benefit of the general public". LAPP raises funds to improve the park through grant writing and donations. To date, this organization has made numerous improvements to the park, including rebuilding the beach wall, creating an access to the beach for people with mobility challenges, building accessible picnic tables, planting trees and hosting family-friendly events.

Accessibility Rating: 3
DNR Grant History:
Project No.: 26-00036; Project Period: 7/1/1965 – 12/1/1967
Project No.: 26-00422; Project Period: 12/31/1975
Project No.: 26-01327; Project Period: 12/31/1989
Project No: TF17-0220; Project Period: 6/1/2020 -8/1/2020
Project No: EC-190840; Project Period: 6/1/2020 – 10/1/2022

2. Pine Mountain Ski Jumping Area: This 40-acre recreation area is located in Breitung Township next to Pine Mountain Lodge and Ski Area, along Pine Mountain Road. Dickinson County owns the property that makes up the ski jumping area. Through a long-standing lease agreement with Dickinson County, the Kiwanis Ski Club, a 501(c)3, has been maintaining, improving, operating and presenting world-class ski jumping tournaments at Pine Mountain since 1939. A new 99-year lease was

signed between Dickinson County and the Kiwanis Ski Club in 2019, which will enable the Kiwanis Ski Club to improve and expand the ski-jumping facilities to comply with Federation International Ski (FIS) rules. Improvements will likely bring additional ski-jumping competitions to Pine Mountain, including the Continental Cup, and Men's and Women's World Cup events. In a study completed at the request of the Dickinson Area Economic Development Alliance, the economic contribution of the Kiwanis Ski Club, 3- day Ski Jump (Continental Cup) event was determined to have a total impact of $1,592,137.00, which includes more than $611,000 in annual wages and $237,006 in taxes paid.

Facilities currently include:

- □World's Highest Artificial Ski Jump (120 Meter)
- □Bulldozer Ski Jump (50 Meter)
- □40 Meter Ski Jump
- □20 Meter Ski Jump
- □Spectator Parking Areas
- □Horseshoe Pit
- □Viewing Platform
- □Judging Stand
- □Upper Michigan Veterans' Memorial
- □Covered pavilion with grill
- □ Warming houses for ski-jump competitors
- □A full-size garrison flag measuring 30 ft. x 60 ft. is flown from atop Pine Mountain.

Accessibility Rating: 1

3. Fumee Lake Natural Area: This 1,808-acre regional natural area is located northeast of the community of Quinnesec in Breitung Township. The original 1,092-acre parcel, which includes Fumee and Little Fumee Lakes, was purchased from the City of Norway in 1993. No fishing is allowed on either of the lakes. Included within the Natural Area is an 11-mile trail system, which is considered one of the premier cross-country ski trail systems in the central UP. During the warmer months, the trail system is used for hiking, mountain biking, and horseback riding. In 2019, Dickinson Trail Network (formerly Dickinson county Bike Path) accepted responsibility for grooming the trails for winter use. Winter activities now include cross-country skiing, snowshoeing and fat-tire biking.

Facilities include:

- □Scenic Views
- □5 Miles of Shoreline
- □Diverse and Natural Forests
- □Significant Wetlands
- □Parking at both East and West Ends
- □Hunting in Designated Areas
- □Non-Motorized Primitive Water Craft Lakes Access
- □Rare and Abundant Wildlife
- □Trail Systems around Little Fumee Lake, Big Fumee Lake, and Indiana Mine
- □Pit Toilets at both East and West Ends

Accessibility Rating: 1
DNR Grant History:

Project No.: TF94-265; Project Period: 9/1/1995 – 12/31/1996

Dickinson County Fairgrounds: This 77-acre parcel of land is located in the southern portion of Norway Township, along U. S. 8, across the street from Marion Park. It is the site of the County Fair held yearly for 5 days on Labor Day weekend. During the summer months, the fairgrounds is also used for stock car races, horse shows, including the Proud Equestrian Program (PEP), and private rentals. Facilities include:

- ☐Caretaker Home
- ☐Open Horse Arena
- ☐Covered Grandstand
- ☐Beer Stand
- ☐Small Animal Building
- ☐2 Exhibition Buildings
- ☐½ and ¼ Mile Race Tracks
- ☐Large Circular Building with 5 Connecting Barns
- ☐120 RV sites with electric & potable water
- ☐Horticulture Building
- ☐Concession Row Building
- ☐2 Speed Barns
- ☐Fair Office Building
- ☐Poultry Building
- ☐Restroom Buildings
- ☐Clay Pulling Area
- ☐Dump Station
- ☐Bedard Covered Horse Arena

Accessibility Rating: 1

In 2015, due to budgetary constraints, Dickinson County, with the permission of the Department of Natural Resources, transferred all of the outlying county parks to their respective Township Boards of Supervisors. The transfer has proven to be extremely beneficial to the townships and to their park users. Townships have taken pride of ownership in their parks and have made many improvements that benefit them as well as local park users. The following parks were transferred in 2015:

In Sagola Township: Gust Newberg Park/Sawyer Lake Park: This regional recreational site is a 24.6 acre parcel of land in the northwest portion of Sagola Township, just west of M-95. The park is located along the north shore of Sawyer Lake and is used for day recreational activities and camping. The park is a popular area for residents of the County and visitors from out-of-town to stop or camp. Large parcels of state forest and CFR land are available near the park for hunting. Facilities include:

- ☐64 Picnic Tables
- ☐30 Camping Sites
- ☐Playground Equipment
- ☐Multi-Purpose Open Field
- ☐Bathhouse
- ☐Site of 4-H Summer Camp
- ☐500 Feet of Buoyed Swimming Beach
- ☐1 Picnic Shelter
- ☐70 Parking Places
- ☐Softball Field
- ☐Fishing and Boat Launch
- ☐Dumping Station
- ☐Walking Nature Trail

Accessibility Rating: 3
DNR Grant History:

Project No.: 26-00037; Project Period: 9/1/1965 – 7/31/1967

In Felch Township: Norway Lake Park: This 15-acre regional park is located in the southeast portion of Felch Township, along the eastern shore of Norway Lake, about 5 miles north of the community of Felch. Only non-motorized boats are allowed on the Lake. The park is close to Gene's Pond, an excellent fish and wildlife area. Facilities include:

- ☐40 Picnic Tables
- ☐60 Parking Spaces
- ☐Softball Field
- ☐Boat Launch
- ☐Fishing
- ☐20 Camp Sites (with electricity)
- ☐Playground Equipment
- ☐800 Feet of Waterfront
- ☐300 Foot Swimming Beach
- ☐Pavilion

Accessibility Rating: 2
DNR Grant History:
Project No.: 26-00035; Project Period: 9/1/1965 – 8/31/1966

In Breen Township: Stromberg Park: This regional park is a 110-acre parcel of land located in the southeast part of Breen Township, north of M-69 on the 1,200-acre Hardwood Impoundment. A developed launch is located at the park for boat access to the Impoundment. Facilities include:

- ☐Boat Launch
- ☐Picnicking area
- ☐Beach area
- ☐20 Rustic Camping Sites
- ☐Pit toilets

Accessibility Rating: 1

In Breen Township: Morgan Mill Pond: A 70-acre park located in the western portion of Breen Township, within the community of Foster City, along the East Branch of the Sturgeon River. Only about 8 acres of this site are currently developed. Facilities in the developed portion include:

- ☐Picnic Table
- ☐Shore Fishing
- ☐Light Natural Swimming Beach
- ☐Pit Toilet
- ☐Ice Rink (set up and maintained by local residents in the winter months)

Accessibility Rating: 1

In Waucedah Township: Lake Mary Park: A 6.2-acre community park located about 2 miles south of the community of Loretto, along the south shore of Lake Mary within the Hamilton Lake chain. Facilities include:

- ☐30 Picnic Tables
- ☐75 Parking Spaces
- ☐400 Feet Water Frontage
- ☐Volleyball Court
- ☐Buoyed Swimming Beach
- ☐Picnic Shelter/Pavilion
- ☐Playground Equipment
- ☐Bathhouse
- ☐4 Horseshoe Pits
- ☐Modern Restrooms

Accessibility Rating: 2
DNR Grant History:
Project No.: 26-00038; Project Period: 1/1/1966 – 9/30/1967

In the City of Iron Mountain Northern Lights YMCA: Dickinson County transferred ownership of the Crystal Lake Community Center building to the Northern Lights YMCA-Dickinson Center in 2018. See next section for detailed description.

DNR Grant History:
Project No.: BF89-464; Project Period: 1/1/1966 – 9/30/1967
Project No.: CM99-043; Project Period: 2/1/2000 – 2/28/2002

3.2 Other Recreational Sites located within the County

Table 3.2 gives an inventory of recreation sites in Dickinson County owned and maintained by other public entities. The data comes from current recreation plans of some minor civil divisions within the County.

Table 3.2 Other Recreational Sites in Dickinson County

General Location	Description	Acreage
Breitung Township		
Chuck Nelson Baseball Field	Fenced-in Baseball Field	1.5
Deer Lake	Playground	0.5
East Kingsford Recreation Area	Playground Equipment, Baseball Field, Tennis Court, Outdoor Basketball Court, Multi-Purpose Open Field, Illuminated Ice Rink, Warming Shelter, and Multi-Purpose Room	3.2

Table 3.2 Other Recreational Sites in Dickinson County

General Location	Description	Acreage
Eskil Memorial Park	Grills and Hiking	8.0
Forgette's Field	Baseball Field	2.8
Moon Lake	Baseball Field	3.7
Quinnesec School	Playground Equipment, Partially Fenced-in Double Tennis Court, Multi-Purpose Open Field, Soccer Field, Ice Rink, and Warming Shelter/Restrooms/ Storage Facility	3.8
Bodelin (DNR Access Site)	Hard-Surface Launch Ramp, Handicap-Accessible Toilets, and Gravel Parking Area	1.3
Fumee Creek Roadside Park (US-2)	Rest Area, Picnic Tables, Toilets, Water Pump, Historical Marker, and Waterfalls	2.0
Badwater Recreation Area	Boat ramp, 3 Mile Hiking Trail, Historic Iron Bridge with Pedestrian Path	
Groveland Mine Recreation Area	Hiking, Camping, Bike Path, and Parking Area	600+
Menominee River Recreational Area (Piers Gorge)	Parking Area, Scenic River Rapids and Cascades, Whitewater Rafting, Fishing, Wildlife Viewing, Hiking & biking Trails, and Snowshoeing Trails	9767
Felch Township		
Solberg Lake (DNR Access Site)	Gravel-Surfaced Ramp, Toilets, and Parking Area	
Six Mile Lake (DNR Access Site)	Hard-Surfaced Ramp, Toilets, and Parking Area	
Gene's Pond State Forest Campground (DNR Access Site)	14 Sites, No Swimming, Scenic Area, Hard-Surfaced Ramp, Toilets, and Parking Area	

Table 3.2 Other Recreational Sites in Dickinson County

General Location	Description	Acreage
City of Iron Mountain		
Iron Mountain City Park	Bocce Courts, Benches, Picnic Tables, Pavilion, Double Sand Volleyball Court, Playground Equipment, Water Faucets, Restrooms, Log Shelter, Stone Fire Stoves, Soccer-Football Fields, Tennis Courts, Walking Trail, Enclosed Deer Yard, Illuminated Ice Rink, Lighted Sledding Area, Lighted Cross-Country Ski Trail, Bike Path, Snowmobile Trail Access Site, Disc Golf, Skateboard Park and Parking Area. DNR funding enabled the City of Iron Mountain to extensively renovate City Park over a four-year period. Matching funds are raised under the auspices of the nonprofit organization, Friends of City Park. That organization continues its efforts to help maintain and improve the park.	69.2
Northern Lights YMCA	A non-profit 501(c) 3 community recreation facility located along Crystal Lake in the south-central portion of the City of Iron Mountain, just east of Westside Field. Dickinson County transferred ownership of the Crystal Lake Community Center building to the YMCA in 2018, at the expiration of a three-year lease. After a successful capital campaign that raised $2.4 million, The YMCA has upgraded, expanded and extensively remodeled the building. The YMCA currently has more than 2500 members. Facilities include: □Indoor Basketball Gym □Paved Off-Street Parking Area □2 Racquet Ball Courts □Indoor Swimming Pool □Game Areas	

Table 3.2 Other Recreational Sites in Dickinson County

General Location	Description	Acreage
	□Meeting Rooms □Office Complex □Sauna □Fitness/Exercise Rooms □Licensed Day Care, up to age 5 □Licensed Kitchen Facility	
Millie Hill Bat Cave/Viewing Platform/Trail System	Bat Cave adit, Samuel Bassett Scenic Overlook Platform, Scenic Views, DeRidder Pavilion, Benches, Picnic Tables, Hiking, Mille Hill Mountain Bike Trails, and Parking Area (& expansion & Future toilets and lighting)	30
Lilja Park at Chapin Pit	Picnic Tables, Parking Area, Pavilion, Hiking and Millie Hill Mountain Bike Trail Access	0.5
Westside Field	Bleachers, Parking Area, Batting Cage, Dugouts, Benches, and Ball Diamond. Adjacent to YMCA.	9.3
Crystal Lake Park	Soccer Field, Playground Equipment, Picnic Table, Volleyball Poles and Ice Skating	5.5
Stockbridge Avenue Park	Green Space	1.0
Forest Street Play lot	Bench, Small Pavilion and Playground Equipment	0.5
Jess Tidmore Memorial Courts	Bench and Tennis Courts	0.3
Pewabic Playfield	Bench, Picnic Table, and Playground Equipment	5.0
Eastside Recreation Complex	Ball Diamond, Scoreboard, Dugouts, Bench, Tennis Courts, Storage Shed, Water Faucet, Ice Rink, Pickle Ball courts and off-Street Parking	5.0

Table 3.2 Other Recreational Sites in Dickinson County

General Location	Description	Acreage
Mountain View Ice Arena	Indoor Ice Rink Complex and off-Street Parking Area. Used extensively by hockey and figure skating clubs, as well as for recreational skating. Also used for exhibitions, craft shows and roller derby meets.	5.0
Ranger Field	Ball Diamond, Scoreboard, Dugouts, Stands Area, Batting Cage, and Off-Street Parking Area	1.5
Northside Ball Field	Ball Diamond, Dugout, Bleacher, Water Faucet, and Playground Equipment	7.5
West Lake Antoine Launch/Park	Launching Piers and off-street Parking	4.5
Hercheids Campo Sportivo	Benches, Tennis Courts, and Playground Equipment	1.5
East Elementary School	Bike Racks, Benches, Gym, Outdoor Basketball Court, and Playground Equipment	7.5
Stanton Street Center	Playground Equipment	0.2
Iron Mountain North Elementary School	Picnic Tables, Benches, Basketball Hoops, Concrete Play Area, Playground Equipment, and Off-Street Parking Area.	14.0
Iron Mountain Junior/Senior High School	Physical Education Building, Indoor Basketball Court, and Auditorium	3.8
Iron Mountain Central Elementary School	Gym, Basketball Court, and Paved Play Area	5.0
Our Place Community Center-Imagination Factory Children's Museum (501(c)3)	Interactive play experiences on many educational and fun exhibits. Educational presentations. An intergenerational gathering place. Housed within the Iron Mountain Public School building at 217 W. Hughitt Street. Accessible.	0.5
Bishop Baraga Catholic School	Paved Play Area, Playground Equipment, and Outdoor Basketball Court	0.2

Table 3.2 Other Recreational Sites in Dickinson County

General Location	Description	Acreage
Iron Mountain Stadium	Running Track, Football Field, Storage Building, Electric Scoreboard, Concession Stand, Ticket Booths, Player Benches, Restroom Building, Practice Field, Backstop, and Grandstands with press box	5.0
Michigan Welcome Center	Michigan Tourism Information Available on Location, rest area and picnic tables.	
Magee Johnson Stage and Park	Covered Stage With Power, Landscaped Grassy Area With Benches, and Parking Area	
Menominee Range Historical Foundation- 501(c)3	Cornish Pumping Engine & Mining Museum- features North America's largest steam engine: Designated as a National Historic Site and National Mechanical/Civil Engineering Landmark, The Cornish Pump, built in 1890, weighs 725 tons, stands 54' tall, features a 40' flywheel; and pumped 3190 gallons of water/minute. Extensive displays of mining equipment and Menominee Iron Range history with artifacts and historic photographs. Exhibit of Iron Mountain Ford Motor Company Plant, Kingsford, which produced 4190 CG-4A gliders and "woodie" station wagons. WWII Glider Museum- features a CG-4A Glider – one of only seven fully restored gliders worldwide – 83' wing span, 12' high, 48' long. Also, Military uniforms from Civil War to Desert Storm; WWII Ford jeep; historic photos and film footage; 1927 Ford Model T Coupe, 1939 Ford V-8 DeLuxe Station Wagon, 1928 Ford AA Fire Engine, 1930 Ford Model A Tudor Sedan,1930 Ford Model AA Dump Truck. **Menominee Range Historical Museum** features over 100 exhibits showing life in the late 1800's, including Native American artifacts. Contains	1.5

Table 3.2 Other Recreational Sites in Dickinson County

General Location	Description	Acreage
	many of the historical archives for Dickinson County.	
City of Kingsford		
Breen Street Playground	Playground Equipment, Multi-Purpose Open Field, and Sledding Hill	0.5
LoDal Park	Parking, Playground Equipment, Fitness Strip, Baseball Fields, Tennis Courts, Horseshoe Pits, Multi-Purpose Open Field, Soccer Field, Restrooms, Basketball Court, and Picnic Tables	21.0
Cowboy Lake Park	Picnic Area, Picnic Tables, Parking, Multi-Purpose Open Field, 500 Feet Water Frontage, Bathhouse, 100 Foot Swimming Beach, Boat Launch and Fishing Pier, and Pavilion	3.5
Ford Park	Playground Equipment, Tennis Courts, and Natural Open Area	5.6
Triangle Court Park	Playground Equipment and Multi-Purpose Open Field	1.1
Fulton Street Park	Baseball Field, Multi-Purpose Open Field, and Ice Skating	0.5
Terrace Park	Open Space, Tennis Courts, Picnic Area, and Basketball Court	0.9
Lyman Street Park	Multi-Purpose Open Field	0.5
Beech Street Park	Softball Field, Multi-Purpose Open Field, and Illuminated Ice Rink	1.5
Menominee River Recreation Area	Picnic Area, Grills, Parking, and Port-o-Pot	6.6
Olympic Street Park	Tot Lot, Benches, and Playground Equipment	0.3
Waverly Street Park	Ice Rink and Multi-Purpose Open Field	0.6
Balzola Field	Baseball Field and Soccer Field	4.0

Table 3.2 Other Recreational Sites in Dickinson County

General Location	Description	Acreage
Kingsford High School Secondary Complex	Parking, Tennis Courts, Outdoor Basketball Courts, Indoor Basketball Courts, Open Field, Gymnasiums, Softball Fields, Stadium, and Auditorium	34.0
Woodland Elementary School	Parking, Outdoor Basketball Courts, Indoor Basketball Court, Soccer Fields, Softball Fields, Gymnasium, and Playground	26.5
City of Norway		
North Nelson Street Play lot	Playground Equipment and Basketball Court	
Ice Rink	Multi-Purpose Open Field, Illuminated Ice Rink, and Warming Shelter	5.0
Lake Mary Park	300 Feet Water Frontage, Playground, Swimming, and Pavilion	1.0
Norway City Hall	Band Shell With Bench Seating	0.5
Strawberry Lake Area	Playground Equipment, Walking Trail, 2 Fishing Piers, Picnic Tables, Benches, Restrooms, Ball Field, BMX Track, Cross-Country Ski Trail Access, Ice Rink, and Parking Area. Iron Belle Trail access.	30.0
Norway High and Elementary School	Parking, Playground Equipment, Tennis Courts, Indoor Basketball Court, Multi-Purpose Open Field, Gym, Meeting Rooms, and Football Field	26.8
Jake Menghini Museum	Display of Historical Items	
Hanbury Lake Park	Boat Launch, Picnic Tables, Horseshoe Courts, Playground Equipment, Restrooms, Nature Trail, Multi-Purpose Open Field	28.0
Norway Township		
Norway Recreation Area (Marion Park)	Picnic Area, Picnic Tables, Playground Equipment, 2 Baseball Fields, Restrooms, 2 Pavilions, Horseshoe Courts, Storage Shed, 4	

Table 3.2 Other Recreational Sites in Dickinson County

General Location	Description	Acreage
	Tennis Courts, and Trailhead for DTN-built and maintained Norway Ogee Single Track, which provides about 6 miles of trail, with extensions planned for 2020 & 2021.The winter trails provides about 10 miles of groomed trail: 4 miles ski track and 10 miles for fat-tire biking and snowshoes.	
East Vulcan Playground	Picnic Area, Parking, Playground Equipment, Baseball Field, Tennis Court, Basketball Court, and Hard-Surfaced Multi-Purpose Area	4.0
Vulcan Middle School	Playground Equipment, Indoor Basketball Court, Gym, and Meeting Rooms	2.6
Norway Reservoir (DNR Access Site)	Hard-Surfaced Ramp, Courtesy Pier, Toilets, and Parking Area	0.9
Carney Lake State Forest Campground and DNR Access Site	11 Sites, Swimming Area, Scenic Area, Pathway, Hard-Surfaced Ramp, Toilets, and Parking Area	8.5
Rock Lake (DNR Access Site)	Gravel Surface Boat Launch, Limited Parking, Scenic Trail, Toilet, and 4 Camping Spaces	80.0
Strawberry Lake	Fishing Pier, Restrooms, Benches, Ball Field, Playground, Walking Trails, Picnic Tables, Parking Area, Ice Skating Rink w/ Warming Hut in Winter Months	30
Sagola Township		
Silver Lake (DNR Access Site)	Hard-Surfaced Ramp, Toilets, and Parking Area	
Edey Lake (DNR Access Site)	Gravel-Surfaced Ramp, Toilets, and Parking Area	
Waucedah Township		
Waucedah Township Recreation Site	Baseball Field, Basketball Court, and Playground	3.0
Lake Mary (DNR Access Site)	Hard-Surfaced Ramp, Toilets, and Parking Area	

Table 3.2 Other Recreational Sites in Dickinson County

General Location	Description	Acreage
Hamilton Lake (DNR Access Site)	Hard-Surfaced Ramp, Courtesy Pier, Toilets, and Parking Area	
West Branch Sturgeon River (DNR Access Site)	Hard-Surfaced Ramp, Toilets, and Parking Area	
West Branch Township		
Pickerel Lake (DNR Access Site)	Gravel-Surfaced Ramp, Toilets, and Parking Area	
West Branch State Forest Campground and DNR Access Site	24 Sites, Pathway, Carry-Down Launching Area, Toilets, and Parking Area	
Lower Dam State Forest Campground and DNR Access Site	5 Sites, Carry-Down Launching Area, Toilets, and Parking Area	
Other Locations of Recreation Opportunities in County:		
Copper Country State Forest	Public Lands Available for a Variety of Outdoor Recreational Opportunities	
Commercial Forest Reserve (CFR) Lands	Private Lands Available to the Public for a Variety of Outdoor Recreation Opportunities	70,177
Michigan Snowmobile Trails	Lake Antoine Trail, Loretto-Felch Trail, Loretto Loop, Fumee Lake Trail, and Felch Grade Trail	
Dickinson Trail Network (formerly Dickinson County Bike Path)	95+ miles of county-wide Road and Single-track trails, which are maintained and groomed for winter riding. (Dickinson Trail Network- Dickinson County Bike Path Committee Maps included in **Appendix A**) (https://www.dtntrails.org/milliehill)	
Iron Belle Trail (Biking)	One of the most scenic segments of the Iron Belle Trail in the UP is in Dickinson County. It's nearly 45 miles follows US 2 from the eastern edge of the county into Norway Township/City around Strawberry Lake and back to US-2. Then north on	

Table 3.2 Other Recreational Sites in Dickinson County

General Location	Description	Acreage
	Quinnesec-Lake Antoine Road, circling Lake Antoine to the north; then west to N. Milwaukee Avenue/Bass Lake Rd./County Rd. 607; then north to Randville to MI Hwy 95; north on MI 95 to MI 69; and west on MI 69 to Iron County. The IBT is maintained by the Dickinson Trail Network (DTN) and County Road Commission.	
True North Outpost	A private business located on Old Piers Gorge Road, TNO offers a variety of outdoor recreational experiences, including white-water rafting excursions through Piers Gorge on the Menominee River; kayak, canoe, stand-up paddleboard, snowshoe, trail- and snow-bike rentals, and a wall-climbing gym.	

4.0 RESOURCE INVENTORY

4.1 Topography

Topography within Dickinson County varies from almost level to very steep. The change is abrupt in many areas, giving the County an interesting topographic structure, and provides elevation changes that invite the development of hiking and mountain bike trails. Average County elevation is approximately 1,200 feet, varying from 800 feet in the southeast to 1,600 feet in the northwest.

Table 4.1

Topographic Features

Dickinson County

Topographic Feature	Location	Elevation	Vertical Rise
Millie Hill	Iron Mountain	1,560 ft.	400 ft.
Pine Mountain	Iron Mountain	1,523 ft.	347 ft.
Fumee Mountain	North of Fumee Lake	1,520 ft.	447 ft.

Briar Hill	Vulcan	1,520 ft.	420 ft.
Ridges	Along Pine & Fern Creek	1,140 to 1,250 ft.	280 ft.

Fumee Mountain rises from the Fumee Lake elevation of 1,073 feet to 1,520 feet, a total vertical rise of 447 feet. This is one of the highest vertical rise features in the County, although many lower ridges and hills are equally as scenic. The highest recorded elevation in Dickinson County is at the site of the Sagola lookout tower, with an elevation of 1,609 feet.

Other notable County land features include:

1. Gently rolling lowland plains along the southern border with some instances of higher hills and ridges.

2. A plateau of high, rolling land along the eastern boundary including parts of Waucedah, Breen, and Felch Townships.

3. Rock Knob highlands exist in the south-central area. Cliffs and domes rise from 200 to 400 feet above the narrow valleys; a highly scenic region.

4. Stony, loamy plains with sand drifts occur along Sagola Township's western boundary. Hills and ridges rise 30 to 40 feet. Some swamp land is also present.

5. In the extreme northwest area along the Escanaba River, a small area eastward from Sawyer Lake, and in northern Waucedah Township along the Sturgeon River, there are lowlands, sand plains, valleys, and swamplands.

4.2 Scenic Sites

The Natural Resources Conservation Service compiled a list of natural, scenic, and historic areas within Dickinson County. It includes roads and activities through wilderness areas, wildlife flooding projects, several picturesque lakes, rock outcroppings, scenic overlooks, and ski areas. Many of these areas contain facilities for camping, swimming, boating, fishing, and hunting. A list of these areas is found below in Table 4.2, which includes the name and type of area, location, size, description, and present use.

Table 4.2
Scenic Sites in Dickinson County

Name	Type	Township	Highway/ Road	Size/MI	Description of Area	Present Use
Katie's Grade & Katie's Lake	Natural	West Branch	Off CR 581, 22 mi. NE of Ralph	640 acres	Natural lake and wilderness area. Remote camping, hiking, etc.	Hunting and fishing
Lake 36	Scenic	West Branch	Off CR 581, 0.5 mi. W of Marquette Co. Line	640 acres	Wildlife flooding project, scenic access road	Hunting
CR 581 Parallel to W. Branch Escanaba River, Breitung Twp. School Camp	Scenic	West Branch	5 mi. of CR 581, 8 mi. NE of Ralph	1,500 acres	Interesting forest area-outdoor education camp, trout stream	Camping areas, fishing, hunting, school camping
Skelly's Ranch	Historic / Scenic	West Branch	CR 581, 6 mi. N of Ralph	640 acres	Old beef and sheep ranch dating back to old logging days	Hunting-reforested
Floodwood-O'Neil Lake – Swartz Creek Road	Scenic	West Branch, Felch & Sagola	From M-95 to CR 581	Extensive	Logging, reforestation, game management area, scenic overlook on Swartz Creek Floodwood Plains	Wilderness area, Campground

Table 4.2
Scenic Sites in Dickinson County

Name	Type	Township	Highway/ Road	Size/Ml	Description of Area	Present Use
Silver Lake – Swartz Creek Road	Scenic	West Branch, Felch & Sagola	From M-95 at Silver Lake to CR 551	Extensive	Logging, reforestation, game management, scenic outlooks, burned over areas, remnants of old logging days	Wilderness Area
Michigamme Backwater	Scenic	Sagola	4 mi. N of Channing off Sawyer Lake Rd	2,000 acres	Manmade hydroelectric reservoir	Cottages, hunting, fishing
Village of Ralph	Scenic	West Branch	CR 581	100 acres	Smallest church in the world, old lumberjacks, natives, quaint village	Residential
Turner Truck Trail	Scenic	Sagola & West Branch	M-95 at Channing to CR 581 at Ralph	Extensive	Scenic wilderness road, pulpwood landing	Woods, wildlife
Leeman Road	Scenic	Sagola & Felch	M-95 at Sagola to CR581	Extensive	Scenic wilderness road, pulpwood landing	Woods, wildlife
Northland Truck Trail	Scenic	Breen & Felch	CR from Norway Lake to Northland Truck Trail	Extensive	Wilderness road, virgin timber, old logging camps, wildlife	Hunting camps, woods, wildlife (future biking/hiking trail network)
Merriman & Browns Lake Truck Trail	Scenic	Breitung, Norway & Waucedah	M-95 to CR 569	Extensive	Wilderness road, hunting camps	Woods, hunting (future biking/hiking trail network)

Table 4.2
Scenic Sites in Dickinson County

Name	Type	Township	Highway/ Road	Size/MI	Description of Area	Present Use
Calumet Mine Road	Scenic	Felch & Breen	Merriman Truck Trail to Felch	Extensive	Wilderness road, hunting camps	Woods, Hunting
Felch Flooding Project	Natural	Felch	2 mi. NW of Felch	40 acres	Flooding for waterfowl	Duck hunting
Hancock Creek Flooding Project	Natural	Waucedah	3 mi. S of Foster City, off CR 569	300 acres	Flooding for waterfowl	Duck hunting, picnicking
Blomgren's Marsh	Natural	Waucedah	3 mi. S of Foster City, 3 mi. W of CR 569	80 acres	Waterfowl marsh	Developing Duck Marsh
Felch School Forest	Scenic	Felch	3 mi. N of Felch off CR 581	300 acres	Plantations, managed forest, geologic area w/rock outcrop and glacial evidence	Woods, hiking, camping
Rock-Carney Lake-Spring Lake Road System	Scenic	Breitung	Off M-95 at Merriman, 2.5 mi. E	10,000 acres	Wilderness lakes, rock outcrop, scenic overlooks, timber	Cottages, camping, picnicking, swimming (future biking/hiking trails)
Twin Falls Dam & Backwater	Scenic	Breitung	3 mi. N of Iron Mountain, CR 607	1,000 acres	Scenic island, color tour, water-based recreation	Boating, fishing camping
Hydraulic Falls Dam & Backwater	Scenic	Breitung	2 mi. S of Iron Mountain	1,000 acres	Scenic overlook, fishing area, Indian portage	Boating, fishing

Table 4.2
Scenic Sites in Dickinson County

Name	Type	Township	Highway/ Road	Size/Ml	Description of Area	Present Use
Pine Mountain Winter Sports Area	Scenic	Breitung	1 mi. N of Iron Mountain	200 acres	World's largest artificial ski slide, ski area, trails	Winter sports (future mountain bike trails & skiing)
Piers Gorge & Menominee River State Recreation Area	Scenic	Norway	1 mi. S of Norway	100 acres	River rapids and cascade	Undeveloped, except trails
Sturgeon Falls Power Dam	Scenic	Norway	3 mi S. of Vulcan off CR 577	100 acres	Backwater area, good fishing area	Fishing
Pine Creek Road	Scenic	Norway & Breitung	CR 396, Iron Mountain to Norway	Extensive	Scenic road, rock outcrops	Farms, timber, wildlife
Fumee Lake Natural Area	Scenic	Breitung	1 mi. N of Quinnesec	1,808 acres	Scenic, undeveloped lake, fishing prohibited	Hiking, canoeing, cross-country skiing, biking, hunting in designated areas

4.3 Soils

The distribution of various soil types throughout Dickinson County is related to geology, landform, slope, climate and natural vegetation patterns. The U.S. Department of Agriculture Soil Conservation Service has classified the soils of Dickinson County into 66 different mapping units, each of which possess unique characteristics. These mapping units are grouped into eight soil associations, each with a distinctive pattern of soils, relief, and drainage. An association typically consists of one or more major soils and some minor soils, and generally responds similarly to use and development. The following is a brief description of the soil associations found within the County:

Soil Association 1: Emmet-Carbondale-Cathro Association: Nearly level to hilly, well-drained and very poorly drained, loamy and mucky soils that formed in glacial till and organic deposits. This association is used primarily for woodland in Dickinson County,

although some areas are cultivated. This association is found in much of Breen and Waucedah Townships, and in small areas of Norway, Felch, and West Branch Townships.

Soil Association 2: Pemene-Emmet-Cathro Association: Nearly level to hilly, well-drained and very poorly drained, loamy and mucky soils that formed in ice-contact drift, glacial till and organic deposits. It is primarily used for woodland; however, cultivated areas do occur in areas of Pemene and Emmet soils. This soil association occurs in over half the County, in all local units. It makes up most of Sagola, Felch, and Breitung Townships, and much of the cities of Iron Mountain and Norway.

Soil Association 3: Pemene-Emmet-Rock Outcrop Association: Rock outcrop and gently rolling to hilly, well-drained loamy soils that formed in ice-contact and glacial till. This association is found on bedrock-controlled moraines and till plains, and is used mainly as woodland. This association is found in all townships except West Branch, although it is most prevalent in Norway and Waucedah Townships.

Soil Association 4: Oconto-Mancelona-Karlin Association: Nearly level to rolling, well drained and somewhat excessively drained, loamy and sandy soils that formed in glacial drift and outwash. This soil association is used primarily as woodland. It is found mainly in the northern part of Norway and Waucedah Townships, and in scattered areas of Sagola Township.

Soil Association 5: Pence-Vilas Association: Nearly level to rolling, loamy and sandy soils that formed in glacial drift and outwash. The principal use of this association is woodland. It is found mainly in Breitung Township and the cities of Iron Mountain and Kingsford, close to the Menominee River.

Soil Association 6: Mancelona-Rubicon Association: Nearly level to rolling, somewhat excessively drained and excessively drained, sandy soils that formed in glacial outwash. The major use of this soil association is woodland. However, cultivated areas do occur in areas dominated by Mancelona soils. The Mancelona-Rubicon soil association is found in the City of Norway, the southern portion of Norway Township, and in small areas of Breitung and Waucedah Townships.

Soil Association 7: Rubicon-Cathro Association: Nearly level to rolling, excessively drained and very poorly drained, sandy and mucky soils that formed in glacial outwash and organic deposits. This association is primarily used as woodland. It occurs only in a portion of Sagola and Felch Townships in the northwest part of the County.

Soil Association 8: Zimmerman-Cathro-Rousseau Association: Nearly level to hilly, excessively drained, very poorly drained and well drained sandy and mucky soils that formed in glacial drift, glacial outwash, and eolian (wind-deposited) and organic deposits. This association is principally used as woodland. It can be found in West Branch, Felch and Sagola Townships in the northern third of the County.

4.4 Water Features

Dickinson County has five major drainage systems. These are the Michigamme River, the West Branch of the Escanaba River, the Ford River, the Sturgeon River, and the Menominee River. Piers Gorge in the Menominee River boasts Class III to Class V rapids, depending on the time of year and water levels. Many of the rivers or at least portions thereof are classified as "top quality" main streams or tributaries. Many ~~small~~ natural lakes also occur in the County. The largest are Lake Antoine (748 acres) and Fumee Lake (507 acres), in the southwestern part of the County, and Sawyer Lake (241 acres) in the northwestern part. There are several hydro-electric~~al~~ impoundments on the Menominee River and two wildlife and recreational impoundments, including the Hardwood Impoundment, on the East Branch of the Sturgeon River.

4.5 Climate

Iron Mountain is 1135 feet above sea level. Dickinson County receives an average rainfall of 28 inches per year, and 58 inches of snow per year. On average, there are 185 sunny days annually. Average temperatures range from 4 degrees (in January) to 79 degrees (in July). The County's interior location results in a vastly decreased Great Lakes climatic influence. This is most noticeable with the increased cloudiness with northwesterly winds during the fall and early winter months. The cloud cover helps to moderate temperatures associated with cold air from Canada. However, as the lakes cool and ice builds up, the lake influence is diminished. Thus, the area's climate, while predominately continental in character, does experience some marine influence.

5.0 DESCRIPTION OF PLANNING PROCESS

5.1 Planning Data

5.1.1 Population

For any planning endeavor, careful attention must be given to the analysis of population trends and projections. Knowledge of the population characteristics of an area is necessary to determine existing or future needs. These statistics help local governments to determine the direction of local capital improvements and related expenditures for recreational planning. They are also useful when applying recreation guidelines to a community.

In 2017, Dickinson County, MI had a population of 25.7k people with a median age of 46.4 and a median household income of $45,681. Between 2016 and 2017 the population of Dickinson County, MI declined from 25,889 to 25,694, a -0.753% decrease, and its median household income grew from $43,373 to $45,681, a 5.32% increase.
People in Dickinson County, MI are getting younger. In 2016, the average age of all Dickinson County, MI residents was 47.

The population of Dickinson County, MI is 95.6% White, 1.42% Hispanic or Latino, and 1.05% Two or More Races. 99.6% are U.S. citizens. 2,519 Veterans live in Dickinson County, which is approximately 10% of the total population. It should be noted that Dickinson County is home to the Oscar G. Johnson Veterans Administration Medical Center that serves Veterans living in the Upper Peninsula and Northern Wisconsin.

The population of Dickinson County from 1940 to 2010 decreased by 2,563 persons, or 8.9% (Figure 5.1.1). The largest percent decline during the seventy-year period occurred between 1940 and 1950, when the County's population declined from 28,731 to 24,844, a 13.5% decline. The large decline during this period is attributed to the closure of the Ford Motor Company plant in the City of Kingsford. From 1950 to 1970, the County's population continued to decline, but at a more gradual pace. In 1970, the population of the County was at 23,753, a 60-year low. From 1970 to 2000, the County's population grew to 27,472, an increase of 15.7%. This growth was primarily the result of increased industrial activity, led by Champion International's (now Verso Paper) construction and operation of a pulp and paper mill within the County.

The populations of the County's three cities (Iron Mountain, Kingsford and Norway) from 1940 to 2010 all declined, with the largest decline, like the County, occurring between 1940 and 1950. Through 2000, three of the County's seven civil townships; Breitung, Norway and Waucedah, experienced growth. Breitung Township continues to experience the largest growth rate in Dickinson County. Figure 5.1.1 provides a graphic representation of the County's population trends:

Figure 5.1.1: Population Trends Dickinson County
Source: https://datausa.io/profile/geo/dickinson-county-mi#economy

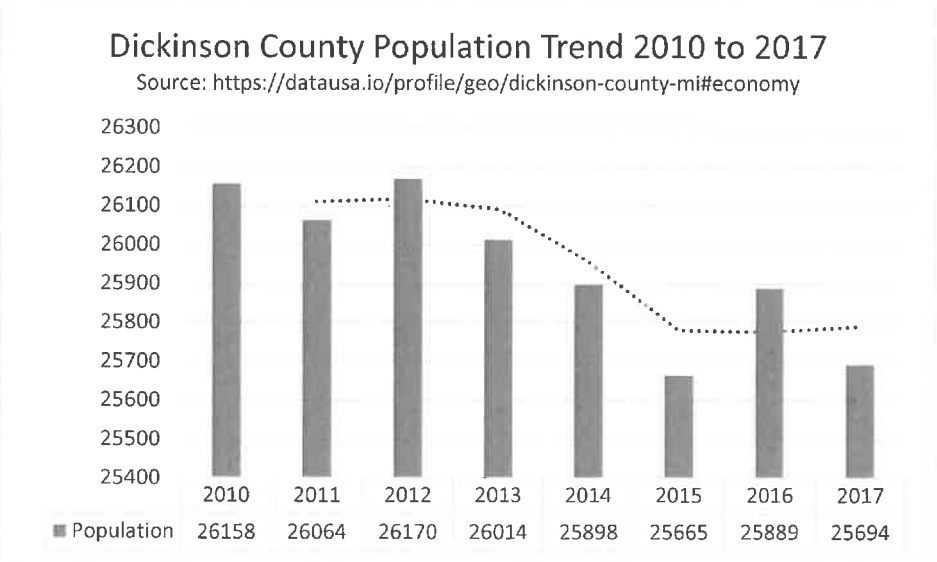

5.1.2 Age Distribution

The age of residents of an area may indicate emerging needs for recreational facilities and programming. Figure 5.1.2 graphically represents the age distribution by percentage of Dickinson County. These are 2019 estimates from the US Census Bureau.
In 2017, the median age of all people in Dickinson County, MI was 46.4. In 2016, the average age of all Dickinson County, MI residents was 47. People in Dickinson County, MI are getting younger, although the median age at the time of the 2010 census was 45.4 years. The decrease in the median age may be attributable to the concerted effort Dickinson Area employers, in conjunction with the Dickinson Area Economic Development Alliance (DAEDA), have made to attract and retain younger workers.

The largest cohort of the County's total population is that of working-age adults 52%; the next largest cohort is that of residents who are 18 and under. People 65 and over now constitute the smallest group (22%). These data portend implications for recreational planning.- As a side note, there has been a noticeable upswing in the construction and use of single-track bike trails, which are usually utilized by younger individuals. Because our population has a significant number of those 65 and over, issues such as site accessibility and programming will be taken into consideration.

Figure 5.1.2: Estimated Age Distribution for 2019, Dickinson County
Source: https://datausa.io/profile/geo/dickinson-county-mi#economy

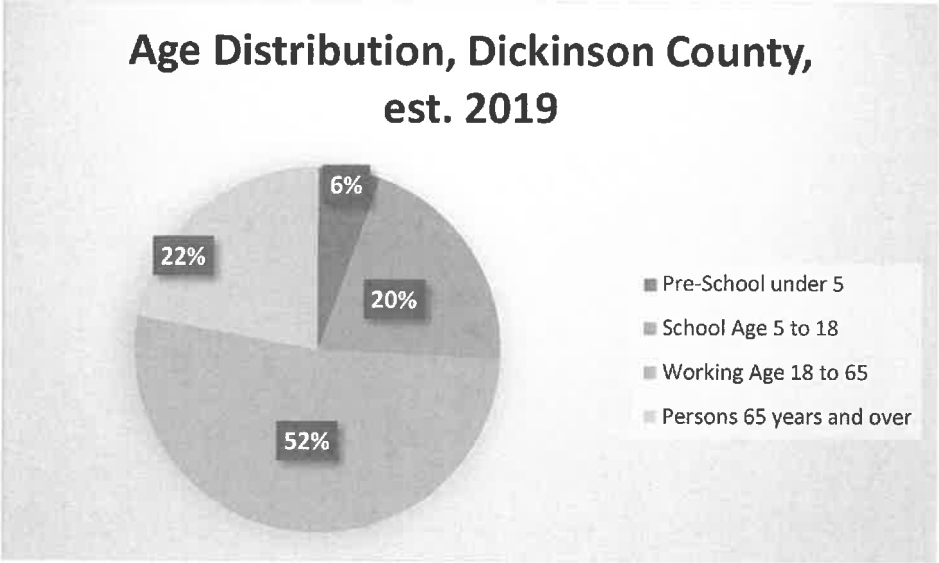

5.1.3 Gender

In 2010, U.S. census data indicated the population distribution of Dickinson County by gender was (49.2%) males and (50.8%) females. The U. S Census 2019 estimated proportion of males (51.1%) to females (49.9%) has changed slightly.

5.1.4 Disability

In 2019 within Dickinson County, the U.S. Census Bureau estimated that 13.1% of the population, or 3535 individuals had a disability. Of working age adults (18 to 64 years of age), 2,120 were estimated to have a disability with a margin of error of +/-320, or 13.6% of that age group. The State of Michigan data indicated a 29.1% employment rate among working-age adults with any disability. Imputed total persons with disabilities in the workforce for Dickinson County would be 616 out of 2,120, with a margin of error of +/-106.

Additionally, there are 139 military veterans who are certified by the Veteran's Administration as 100% disabled or Individually Unemployable. It can be assumed that these numbers have been included in the total number of individuals with disabilities. Dickinson County has a higher than usual number of veterans with disabilities because of the Oscar G. Johnson VA Medical Center located in Iron Mountain.

5.1.5 Unemployment

In Dickinson County, the 2018 American Community Survey 5-Year Estimates indicate that there were 11,092 individuals in the workforce: 4,937 females and 6,155 males. Individuals who live and work within Dickinson County number 9,702.

As of November 2019, the civilian labor force was 12,427, with 11,990 people employed and 437 people unemployed. The unemployment rate was 3.5%. For comparative purposes, the Michigan State unemployment rate for the same period was 4%. The unemployment rate fluctuates due to economic, seasonal and environmental factors, although it has improved and stabilized within the last three years. There remains a strong demand for skilled workers, with an estimated 500+ job openings in a variety of occupations.

5.1.6 Economic Characteristics

In the past, the economy of Dickinson County was principally based on the iron ore mining industry. The County lies on the historic Menominee Iron Range, the State's second largest, which was discovered in 1873. Mining on the Menominee Iron Range was a

dominate force in the economy of the County for about 50 years. What remains of mining today are abandoned mine shafts, the Menominee Range Mining Museum (Cornish Pump), the Chapin mine ponds and historical markers from that era.

Although mining was the primary industry, most of the County contained rich timber lands as well. From the 1860's to about 1918, timber from the County was floated on the Menominee River to sawmills located in the cities of Menominee and Marinette (WI).
In 1920, the County's economic structure began to evolve from mining and lumbering to manufacturing. As the price of iron ore declined sharply and mechanization made it possible to produce iron ore with less labor, hundreds of miners throughout the Upper Peninsula lost their jobs. However, the Ford Motor Company announced that it was establishing a saw mill and an automobile body plant in Kingsford. Ford's investment in Dickinson County was critical in the preservation of jobs and industry in Dickinson County while other communities struggled through the lean years.

Peak employment at Ford Motor Company was reached in 1925, when more than 7,500 men were on the payroll. There was a gradual reduction in employment in the 1930's and 1940's. During WWII, the factory converted its use to constructing Waco CG-4A Gliders for the war effort. In June 1942, a contract was arranged with the Ford Motor Company for 1,000 CG-4A gliders. The entire Kingsford facility was converted to glider production, with 4,500 people working around the clock in eight-hour shifts. During their peak production period, the workers at Kingsford turned out eight gliders per day. The Kingsford plant eventually turned out 4,190 CG-4As, more than twice the number of gliders produced by any other company during the war. Ford's price tag of only $15,400 per CG-4A demonstrated the economy of streamlined and efficient mass production. Nearly all of the other 15 manufacturers of CG-4As charged Uncle Sam a minimum of $25,000 for their gliders. The Ford Motor Company was twice given the *E for Excellence* award by the United States War Department. In 1951, after 31 years of operation, the Ford Motor Company closed down its operations in Dickinson County.

Wood products, one of the predominant industries earlier in the 20th century, and always a factor in the local economy, is again a major employer in Dickinson County. Verso Paper Corporation, in Quinnesec, employs 475 people (2012), and provides a market for the logging and forest management industry in Dickinson County and the surrounding area.

Tourism has also become a significant source of local income. The Upper Peninsula Travel and Recreation Association estimate that the tourism industry in Dickinson County contributes nearly $65 million annually to the local economy. The Pine Mountain Ski Jumping Tournament is substantially ($1.5M) to that total. Heritage visitors enjoy touring the WWII Glider and Cornish Pump Museum as well as several other museums, the UP Veteran's Memorial on the top of Pine Mountain, adjacent to the Pine Mountain Ski Jump, geographic sites like the Groveland and Chapin Mine Ponds, the Iron Mountain Iron Mine

and the Millie Hill Bat Cave. Bike trails are becoming abundant, with new trails in the Fumee Lake Natural Area, Norway at Marion Park & to the Menomonee River Recreational Area, Millie Hill area and others. Sites on the National Register of Historic Places include the Iron Mountain Downtown District and the Old Iron Bridge over the Menominee River (Breitung Township) that connects Wisconsin and Michigan. Local lakes, rivers and streams offer many opportunities for recreation and Dickinson County claims one of the best grouse hunting sites and fishing in the Midwest.

Trail development planning, acquisition and development are ongoing. In 2019, the pace increased significantly when the Dickinson County Bike Path was reorganized as the Dickinson Trail Network, incorporating the vision to include single track, mountain biking and winter biking into the recreational mix. Although snowmobile and ORV trails are present in abundance, in the last several years there has been a concerted effort to develop recreational bicycle trails within and throughout the County. The Dickinson Trail Network (DTN (501(c)3) continues to play an integral part in establishing a master plan for a trail system and has marked more than 80 miles of bicycle trail. There are more than 200 miles targeted for development.

Dickinson County was instrumental in promoting a southern route for the Iron Belle Trail by collaborating with the six ~~other~~ southern counties of the Upper Peninsula and more than 60 local units of government and organizations. The route, encompassing roughly 45 miles through Dickinson County, is now officially designated and is marked with the IBT logo. Significant grants were awarded to DTN for trail construction and signage. As the route becomes more well-known, it will bring additional tourism dollars to Dickinson County and to the other counties along the route.

According to the 2014-2018 American Community Survey (in 2018 dollars), the per capita income for Dickinson county residents was $28,020 which was $2,336 less than the per capita income for the State.

In 2017, households in Dickinson County, MI have a median annual income of $45,681. This is in comparison to a median income of $43,373 in 2016, which represents a 5.32% annual growth. In 2017, the tract with the highest Median Household Income (Total) in Dickinson County, MI was Census Tract 9507, with a value of $55,455, followed by Census Tract 9502 and Census Tract 9501, with respective values of $51,895 and $45,568

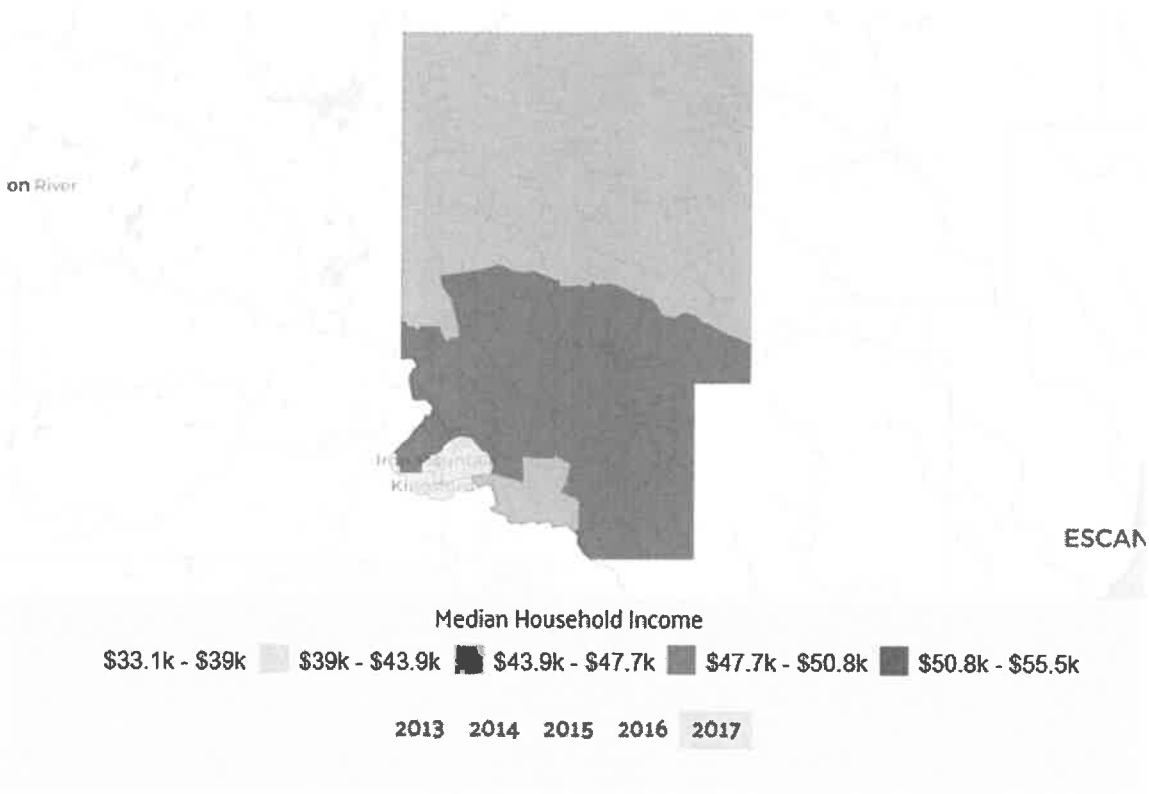

(https://datausa.io/profile/geo/dickinson-county-mi#economy).

Source: https://datausa.io/profile/geo/dickinson-county-mi#economy

5.1.7 Land Use

Dickinson County has a total of 777.05 sq. mi. (493,472 acres). Its land mass is 761.4 square miles (478,296 acres) and water comprises 15.65 square miles (10,016 acres). The current land use inventory of Dickinson County indicates the 399,510 acres of land, or 80% is forested. In terms of total acreage, this land use category is followed by wetlands and non-forest uses, which total 32,406 and 21,963 acres, respectively. Forty-six percent of Dickinson County acreage is owned by the State of Michigan. Table 5.1.7 shows the existing land use in the County.

Table 5.1.7
Dickinson County Land Use

Land Use	Acres	Percent
Multi-Family	2.0	-
Single Family, duplex	5,831.3	1.17
Mobile Home Park	88.9	0.02
Commercial	651.4	0.13
Industrial	1,907.8	0.38
Transportation, Communications, and Utilities	1,160.8	0.23
Extractive	2,320.9	0.47

Dickinson County has a total of 777.05 sq. mi. (493,472 acres). Its land mass is 761.4 square miles (478,296 acres) and water comprises 15.65 square miles (10,016 acres). The current land use inventory of Dickinson County indicates the 399,510 acres of land, or 80% is forested. In terms of total acreage, this land use category is followed by wetlands and non-forest uses, which total 32,406 and 21,963 acres, respectively. Forty-six percent of Dickinson County acreage is owned by the State of Michigan. Table 5.1.7 shows the existing land use in the County.

Table 5.1.7
Dickinson County Land Use

Open Land	56.3	0.01
Outdoor Recreation	804.7	0.16
Cemeteries	140.3	0.03
Agriculture	21,168.8	4.26
Non-Forested	21,963.1	4.44
Forested	399,510.2	80.47
Water	7,260.6	1.46
Wetlands	32,406.2	6.53
Barren	1,180.1	0.24
Total Acreage	496,453.4	100.00

Source: MIRIS

All land use planning will serve to incorporate the ongoing efforts of the Dickinson County Bike Path, whose trail maps are attached in Appendix B, and Little Badwater Recreation Trail, whose Botanical Survey is attached in Appendix C.

5.1.8 Local Transportation System

The County's road network is broken down into state trunk line, primary, and local roads. There are 510.18 miles of roads within the County, 81.74 miles of state trunk line, 176.76 miles of primary, and 251.68 miles of local. The following details the state trunk lines that run through the County:

U.S. 2, U.S. 141, and M-95 are the major thoroughfares through Dickinson County. U.S. 2 is the route that links the County to the eastern and western portions of the U.P. This highway runs from Interstate 75, near the City of St. Ignace, to the City of Ironwood, and then continues on to the west coast. A multi-lane stretch of U.S. 2 runs within Dickinson County from the City of Norway's eastern limit to about one-mile north of the City of Iron Mountain.

U.S. 141 is an important north/south highway route in the west-central portion of the Upper Peninsula. It runs from the U.S. 41/M-28 intersection in Baraga County, through the cities of Crystal Falls and Iron Mountain, then to the City of Niagara, WI and beyond. With the Iron Mountain/Kingsford urban area, it runs north from Niagara, through a small portion of south-central Breitung Township, connects with U.S. 2 just west of the community of Quinnesec, and then runs with U.S. 2 through the City of Iron Mountain. In

Iron Mountain, U.S. 141 and U.S. 2 merge with M-95 in the central portion of the City, and separate from M-95 about one-mile north of Iron Mountain and runs westerly into Spread Eagle, WI.

M-95 is an important north/south state trunk line that links the County to the cities of Ishpeming, Negaunee, and Marquette via U.S. 41/M-28. It runs from the Wisconsin border, through the cities of Kingsford and Iron Mountain, northern Breitung Township, the communities of Sagola and Channing, and then terminates at U.S. 41/M-28 in Marquette County. M-69 is a "cut-across" route that can be used by east-west travelers in the U.P. wanting to avoid the U.S. 2 urban congestion in the Iron Mountain area. It runs east-west from western Delta County, through the northern portion of Menominee County, central Dickinson County, and western Iron County, and then ends at the intersection with U.S. 2/141 in the City of Crystal Falls.

Ford Airport (IMT), located 3 miles from Iron Mountain, serves Dickinson County. It is 1182.0 feet above sea level at Latitude 45-49-06.1000N (45.818361) and Longitude 088-06-52.4000W (-88.114556). Commercial jet passenger service is provided by Delta Airlines operating as SkyWest Airlines, under a contract for Essential Air Services. SkyWest offers two flights daily: one to Minneapolis-St. Paul (MSP), and another to Detroit (DTW). Passenger counts have exceeded 20,000 in 2018 and 2019. Critical Care Air Ambulance services are provided by Valley Med Flight. Based at Ford Airport, they offer emergency transport from any city in the west-central Upper Peninsula to medical centers in Wisconsin, Michigan, Minnesota and beyond. Non-emergent medical flight services are provided by a non-profit organization, Northwoods Air Lifeline. A number of private planes are also hangered at Ford Airport. Two large, business hangars were added in 2019, and the main runway was repaved at a cost of $5.4 million. The airport is located within the City of Kingsford. The airport facility is owned and operated by Dickinson County.

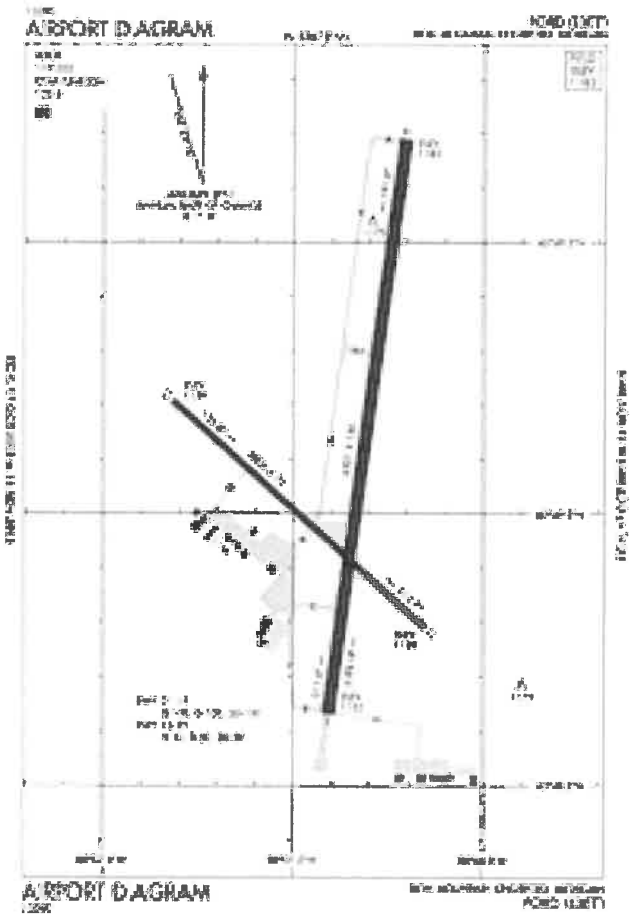

The Rail service in the County is provided by the Escanaba and Lake Superior Railroad (E&LS), the line incorporated in 1898. E&LS is a privately owned short line railroad company operating in Northeastern Wisconsin and the Upper Peninsula of Michigan. Under current ownership, the E&LS has expanded from the original core line of 65 miles that was purchased in 1978, to over 235 miles of operating railroad in 2005. The E&LSRR is headquartered in Wells, MI, where they operate a freight car repair and paint facility. E&LS maintains an additional office located in Green Bay, WI.

E&LS operates freight service from Wells (Delta County), MI to Ontonagon (Ontonagon County), MI, and from Republic, MI to Green Bay, WI, with the two lines crossing at Channing, MI. E&LS maintains track in Sagola, Felch and West Branch townships within Dickinson County.

From Channing the rail line runs south to the community of Sagola and onto the City of Iron Mountain. The track then runs east from the City of Iron Mountain to the Village of Powers (Menominee County), with a spur going from the community of Quinnesec to the City of Niagara, WI. From Powers, it runs south to the cities of Menominee and Marinette and then south-southwesterly through the cities of Peshtigo and Oconto, WI. The track eventually terminates at its regional hub in the City of Green Bay, WI.

The line was owned and operated by the Chicago & Northwestern Railroad Co. (C&NW) from the 1860's until April of 1995, when it was purchased by the Union Pacific Railroad Company, as part of a nationwide takeover of the entire C&NW system. About two years later, E&LS purchased this line along with the rest of the C&NW lines in the Upper Peninsula and Northern Wisconsin from Union Pacific. The E&LS operates on trackage rights over the Canadian National Railroad from North Escanaba, MI to Pembine, WI. The E&LS connects with the Canadian National at Green Bay, North Escanaba, Pembine, and Iron Mountain, MI. E&LS's major customer in Dickinson County is Louisiana Pacific (LP) in Sagola Township.

In 2012, E&LS abandoned rail siding on the north side of Iron Mountain. It is now being used for recreation: running and biking in the summer; snowmobiling in the winter.

Canadian National Rail serves as the primary east-west connector route between northern Wisconsin (Chippewa Falls) and the Eastern Upper Peninsula and into Canada. Canadian National has rail in Breitung, Waucedah and Norway townships in Dickinson County.

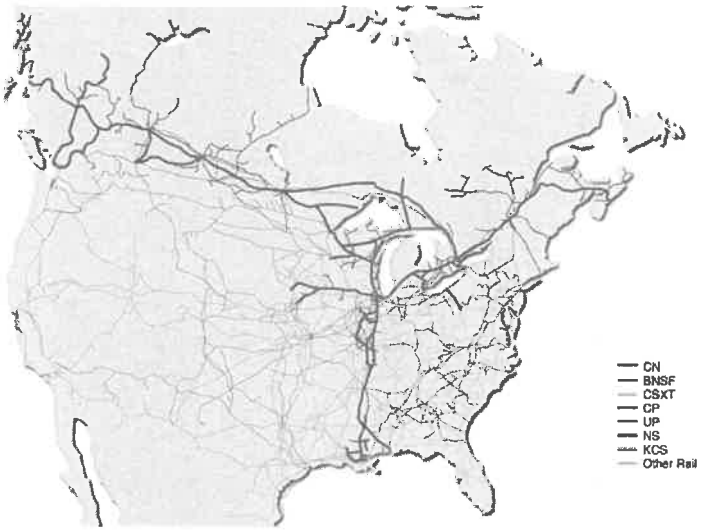

Canadian National Rail Map

5.2 Planning Method

One method to assess community recreation needs is the Standards System. Standards that have been developed by the National Recreation and Park Association (NRPA) provide a scale against which an existing recreation system can be measured so the guidelines for future needs can be created. Standards link the number of acres to the community's population.

Open space needs are usually assessed using space standards, the most common and widely used measure of a recreation system's adequacy. Total park and recreation space is usually expressed as acres per population. These space standards are useful in assessing current and future open space needs and demand. Table 5.2.A depicts local and regional open space standards.

Table 5.2.A
Local and Regional Open Space Standards

Park Type	Service Area	Size (Acres)	Acres/1,000 Population	Uses
Mini-park	< ¼ mile radius	1 or less	0.25 to 0.5	Specialized facilities that serve a concentrated or limited population or specific group, such as tots or senior citizens
Neighborhood Park/ Recreation Area	¼ to ½ mile radius	15 +	1.0 to 2.0	Area for intense recreational activities, such as field games, crafts, playground apparatus areas, skating, picnicking, wading pools, etc.
Community Park/Recreation Area	1 to 2 mile radius (several neighborhoods)	25 +	5.0 to 8.0	Area of diverse environmental quality. May include areas suited for intense recreation facilities, such as athletic complexes, large swimming pools. May be an area of natural quality for outdoor recreation, such as walking, viewing, sitting, picnicking. May be any combination of the above, depending upon site suitability and community need.
Regional Park/Recreation Area	1 hour drive time (several communities)	200+	5.0 to 10.0	Area of natural or ornamental quality for outdoor recreation, such as picnicking, boating, fishing, swimming, camping, and trail use; may include play areas.

Source: Roger A. Lancaster, Ed. 1983, Recreation, Park and Open Space Standards and Guidelines. Alexandria, Virginia: National Recreation and Park Association.

A community's park system under NRPA standards should have a minimum of 6.25 to 10.50 total acres of developed open space per 1,000 count in population. Dickinson

County with a population of 27,472 would have to provide 6.87 to 13.74 acres of mini parks, 27.47 to 54.94 acres of neighborhood parks/playgrounds, 137.36 to 219.78 acres of community parks/recreation areas, and 137.36 to 274.72 acres of regional parks/recreation areas.

Dickinson County encompasses about 2,979 acres* of public owned recreational land (county, city, township, and school owned sites). The breakdown of this recreation land includes: 15 acres of mini parks, 72 acres of neighborhood parks/recreation areas, 196 acres of community parks/recreation areas, and 2,696 acres of regional parks/recreation areas (Table 5.2.B). Comparing NRPA standards with the number of acres of recreational land found in the County, the County has excess acreage of land in mini parks, neighborhood parks/playgrounds, and regional parks/recreation areas and the recommended acreage for community parks/recreation areas. The total acreage of recreation land in the County is more than adequate for the current population.

*Total acreage figure does not include Copper Country State Forest land and facilities.

Table 5.2.B
Existing Public Open Space
Dickinson County

Park Type	Park Land Area (Acres)	Land Area Standard (Acres)
Mini Parks	15	6.87 to 13.74
Neighborhood Parks/Recreation Areas	72	27.47 to 54.94
Community Parks/Recreation Areas	196	137.36 to 219.78
Regional Park/Recreation Areas	2,696	137.36 to 274.72
Total Parks/Recreation Areas	2,979	309.06 to 563.18

5.3 Park Accessibility

The American with Disabilities Act (ADA) identified specific standards that would ensure that persons with disabilities have the same opportunities to fully participate, live independently and be economically self-sufficient within society. The Act is comprised of five sections: Employment, Public Accommodations, Transportation, State and Local Government Operations, and Telecommunications.

Title II of the ADA, Public Accommodations, is relevant to the level of accessibility and equal provisions of service at publicly owned outdoor recreation sites. This title states that discrimination against persons with disabilities is prohibited in all services, programs, or activities provided by public entities. The general requirements set forth under this section came into effect January 26, 1992. Remodeling or new construction of facilities and buildings had the same deadline date to become accessible to persons with disabilities. In existing buildings and facilities, nonstructural changes to improve

accessibility were required by January 26, 1992, while all structural improvements of the facilities and buildings were required by January 26, 1995.

The ADA of 1990 required that "reasonable accommodation" be made to the needs of the estimated one in five people in this country who have a disability. That is, all public and private goods and service providers and employers must remove all structural and communication barriers from facilities, or provide alternative access where feasible.

The American Disability Act Amendments of 2008 broadened the definition of disability. In the 2010 ADA Amendments, Part 35 specifically relates to nondiscrimination on the basis of disability in State and Local Government Services.

On September 26, 2013 the U.S. Access Board issued new accessibility guidelines for outdoor areas on federal lands. The guidelines provide detailed specifications for accessible trails, picnic and camping areas, viewing areas, beach access routes, and other components of outdoor developed areas when newly built or altered. They also provide exceptions for situations where terrain and other factors make compliance impracticable.

Requirements for trails and pedestrian access routes address surface characteristics, width, grade, and cross slope. Exceptions are included for these and other provisions under certain conditions stipulated in the guidelines. Departures are allowed where compliance is not practicable because of terrain or prevailing construction practices. Exceptions are also recognized where compliance would conflict with mandates such as the Endangered Species Act and other laws or where it would fundamentally alter a site's function or purpose.

Accessible natural-surface trail

Under this rulemaking, the Access Board is first developing guidelines under the Architectural Barriers Act (ABA) for outdoor developed areas managed by the federal government. Guidelines for non-federal sites covered by the Americans with Disabilities Act (ADA) will be developed separately at a later date. The Federal guidelines originate from recommendations prepared by the Outdoor Developed Areas Regulatory Negotiation Committee, an advisory panel chartered by the Access Board. (http://www.access-board.gov/guidelines-and-standards/buildings-and-sites/about-the-aba-standards)

Until such time as Guidelines for non-Federal sites covered by the Americans with Disabilities Act (ADA) are developed separately through a subsequent rulemaking, the USDA Forest Service Outdoor Recreation Facility and Trail Accessibility Guidelines will be applied to any new construction or updates to existing facilities. The guidelines established by the USDA Forest Service for improving the accessibility of recreational

areas and trails are detailed in **Appendix B**.

Recommendations regarding buildings, restrooms, slopes of ramps, and parking stalls must be seriously considered. These types of facilities all have current standards set by the ADA of 1990.

Where more than one restroom facility exists, at least one must be accessible by persons with disabilities. In some cases, this would require minimal remodeling; in others, it could require substantial modification.

At least one picnic table and one grill designed to accommodate persons in wheelchairs should be available at each park (if these types of facilities are not currently available). These facilities should be identified with a sign showing the universal symbol of accessibility.

At least one in 25 parking stalls should be designated for disabled parking. These stalls must be the closest spaces to the park or facility entrance, have a direct route to and from the stalls, and must have a marked adjacent access aisle of 60 inches and an unobscured vertical sign that shows the universal symbol of accessibility. Slope of these spaces and aisles cannot exceed 1:50.

Stable barrier-free pathways providing linkages from one recreation amenity to another will be needed at most of the County's outdoor facilities. They must be at least 36 inches wide, and a 60 x 60 inch passing space or turnaround must be provided every 200 feet. If a pathway level changes more than ½ inch, the pathway must be ramped. If the level change is between ½ inch and ¼ inch, the levels must be beveled. Where water fountains are available, spouts should be no more than 36 inches above the finished floor. If the fountain is freestanding or built-in and does not have a clear space underneath, a clear floor space of 30 to 48 inches alongside the fountain for a parallel approach must be provided. Wall or post mounted fountains must have a clear knee space under the fountain of at least 27 inches high by 17 to 19 inches deep by 30 inches wide. Controls must be located at the front edge of the fountain and operable with one hand without twisting the wrist.

As noted, the recreation sites in Dickinson County are not completely accessible according to the ADA Standards. As funds become available, restrooms, pathways, parking, and general accessibility of all amenities will be evaluated and upgraded according to ADA and USDA Forest Service guidelines over the next few years to assure that all people are given the same opportunities for recreational access in Dickinson County.

6.0 THE PUBLIC INPUT PROCESS

The Michigan Department of Natural Resources requires that two methods be used to incorporate public input into the recreation planning process. In 2018, The Dickinson County Planning Commission conducted an extensive survey in Dickinson County to determine a number of recreational preferences and other aspects of county services. A total of 415 surveys were completed either online or on paper. Respondents were asked how they felt about "Increasing Tourism in Dickinson County. Based on the responses, the results were overwhelmingly in favor of expanding tourism options:

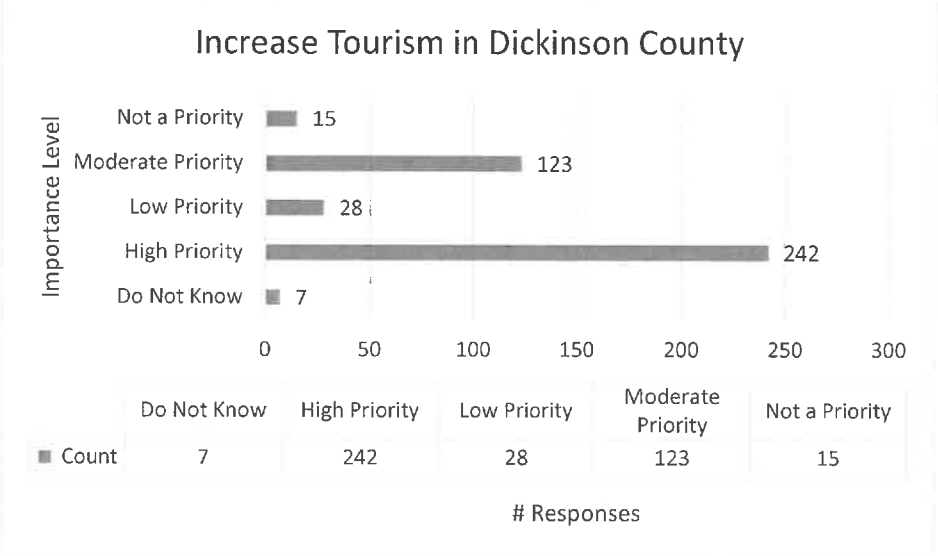

Additionally, campground users at Lake Antoine were asked to voluntarily submit surveys on an ongoing basis to determine what park improvements were needed from the users' point of view. All aspects of park services were surveyed, including the reservation system functionality, check-in and check-out process, current campground ratings, Improvements needed, and recommendation to others. A copy of the Planning Commission public surveys are located in the **Appendix C**.

Unfortunately, the response rate for the campground survey was less than desirable, and could not provide a statistically significant sample for evaluation. Comments, feedback and concerns regarding the Park were also retrieved from Social Media (FB, Messenger), phone calls and emails. When issues became known, it was addressed.

Issues still exist in key areas, which are addressed throughout the Recreation Plan. The commissioners felt it was important to attempt to reach out to our citizens for input to encourage and empower~~ing~~ them to have a stake in future park planning.

In addition to the survey implemented above, Lake Antoine Park Partners held public forums in the spring of 2018 and 2019 to specifically discuss park issues and potential future park improvement projects. The information obtained assisted Dickinson County in

developing a 10-year Improvement Plan for Lake Antoine Park, which is included with this Plan. Lake Antoine Park Partners also developed a Strategic Plan to guide their efforts to improve Lake Antione Park. **Table 8.1.**

The County's Parks Committee is the primary facilitator in identifying local recreation needs for Dickinson County, with the County Planning Commission serving as a secondary facilitator. During the development of this recreation plan update, the Planning Commission spent time meeting with people who use the County's recreation facilities, civic and community groups, and local sporting associations, who addressed local recreation needs.

6.1 Recreational Needs Assessment

Dickinson County's long-term commitment to recreation services is clear. The long- and short-range goals and policies of this plan underscore the growing importance of recreation on a County-wide basis. One thing seems clear, and that is to provide for use of these recreation resources by a broad segment of the population, including persons with disabilities. Compared to the 2010 census data, it is apparent that the demographics of Dickinson County are changing. The population groups of 64 and older, younger working professionals, as well as persons with disabilities, must be taken into consideration when planning for new or upgrading existing facilities. They must be designed to accommodate access and enjoyment by people with disabilities, the elderly, and those who are able-bodied, since all parks are in the public trust.

Recreation needs assessment for Dickinson County takes a multi-dimensional approach. The whole process of needs assessment involves, for the most part, interactive thinking and evaluation by a number of groups and individuals. The process for evaluation is the responsibility of the Dickinson County Board of Commissioners. The Board of Commissioners has the financial responsibility of implementing recreation needs and thus must coordinate these needs with available financial resources.

6.2 Specific Recreation Facility Needs

Specific recreation facility needs should be based on the expressed desires of the residents of Dickinson County, which is accomplished through an interactive process involving the Board of Commissioners, Parks Committee, Planning Commission, County staff (Controller and Park Manager), Fumee Lake Natural Area Commission, Affiliated Recreation/Nonprofit/Tourism entities, and the general public.

7.0 GOALS AND OBJECTIVES

The goals and policies that follow were used as guides for recreation related decision making. Consideration and observance of recreation policies should ultimately lead a community toward the attainment of its short and long term goals.

Specific development projects and programs should initially be evaluated with respect to the recreation goals and policies and then in terms of the proposal's contribution to the recreation system of Dickinson County.

GOAL I: Provide a wide variety of recreational opportunities to all residents of Dickinson County.

Related Policies:

- Projects should meet or exceed current ADA recommendations and standards wherever possible.
- Future development of recreation facilities should exceed minimum ADA recommendations and standards.
- Facilities should be for multiple and/or year-round use.
- User fees should be established where feasible to help defray maintenance cost at specific facilities.
- Proposed projects should be directed toward the elimination of the deficiencies (needs) referenced in this plan.
- Maximize the utilization of state and federal assistance programs to acquire, develop or rehabilitate recreational areas and facilities wherever possible.
- Coordinate recreation planning and implementation activities between adjoining communities to avoid duplicity of services and effort to make optimal use of financial and other resources.

GOAL II: Optimal use should be made of new and existing resources and facilities.

Related Policies:

- Facilities should be capable of accommodating multi-jurisdictional needs where economically feasible.
- Sites selected for development of facilities or parks should be suitable in terms of population served (existing and future) and physical properties of the site.
- Sites should be preserved for future recreation development endeavors, especially in areas with the greatest potential for residential growth.
- Site plans should be created to guide the development of recreational facilities.
- Cooperative or joint development of facilities by neighboring communities should be encouraged whenever feasible.
- Proper maintenance should be assured for facilities by the responsible unit of government.
- Volunteer efforts by citizens and service clubs should be encouraged whenever feasible in all aspects of operations and maintenance of recreational areas.

GOAL III: Facilities should be developed to enhance the cultural, historic, and natural characteristics of the area or site.

Related Policies:

- Preservation and restoration of historic sites is encouraged.
- Site planning should take into consideration natural topography, vegetative cover, scenic characteristics, and the historical significance of the location to be developed.
- Tourist-related recreational development should be encouraged.
- The identification of historic areas should continue within the County.

8.0 ACTION PROGRAM

Under ideal conditions, a plan should always result in an action; however, this circumstance is not always achievable. Thus, communities need to maximize their efforts toward attaining the general goals identified within a particular plan. Dickinson County has formulated the following capital improvement program and development schedule for implementing its recreation plan (Table 8.1). It is the County Board of Commissioners' intention that this Development Schedule should be followed as closely as possible. References to the Natural Resources Trust Fund are meant to embrace other forms of State and Federal funding as well.

Table 8.1
Recreation Development Schedule
Dickinson County

Project	Year	Cost/Funding Source
Lake Antoine Park		
• Site Plan of Lake Antoine Park with Infrastructure Locations	2020	No Cost – will be prepared in-house.
• Purchase and Installation of new Playground Equipment	2020	$45,000 MNRTF/LWCF/RP Grant and Local Match
• Build New Main Bathroom and Shower Facility	2022	$400,000/MNRTF/LWCF/RP Grant and Local Match
• Electrical Service Upgrade to 50Amps	2020	$100,000 County Funds

Table 8.1
Recreation Development Schedule
Dickinson County

Project	Year	Cost/Funding Source
• Road Improvements to Include Paving, Improved Parking Delineations, Upgrade of Barriers for Improved Traffic Flow/Control and Installation of Kiosk to Serve Patron Information Needs	2023	$100,000/DC Road Commission/DNR Grant/Local Match
• Replacement of Boat Launch and Boat Wash Station to Alleviate AIS Infestations	2020	$80,000/LWCF/Recreation Passport/AIS Grant/Local Match
• Upgrade Water and Sewage Systems	2024	$100,000/ MNRTF/LWCF/PR Grant and Local Match
• Expand community events and recreational offerings at Lake Antoine Park through marketing efforts. Add amenities to enhance the camping and park experience	2020-2025	Lake Antoine Park Partners
Dickinson County plans to incorporate universally accessible improvements and installations in all future projects.		
Construct a Pavilion at the **Fumee Lake Natural Area** for Patron Use and Natural Resources Education.	2022-2025	$25,000/MNRTF/LWCF/PR Grant and Local Match
Restore the historic **Twin Falls Bridge** on the Menominee River for use by Non-Motorized vehicles, and Establish and Promote the **Badwater Recreation Area.**	2025	Wisconsin-Michigan collaboration for grants and fundraising activities. DTN, Breitung Township and WE Energies lease agreement.
Pine Mountain Ski Area	2020-2021	See amendments for details to add to plan: $3.6 Million expansion project

Table 8.1
Recreation Development Schedule
Dickinson County

Project	Year	Cost/Funding Source
Dickinson County Fairgrounds, electrical upgrade to the fairgrounds.	2020	$96,000/County Funding

APPENDIX A

DICKINSON COUNTY, MI TRAIL MAP

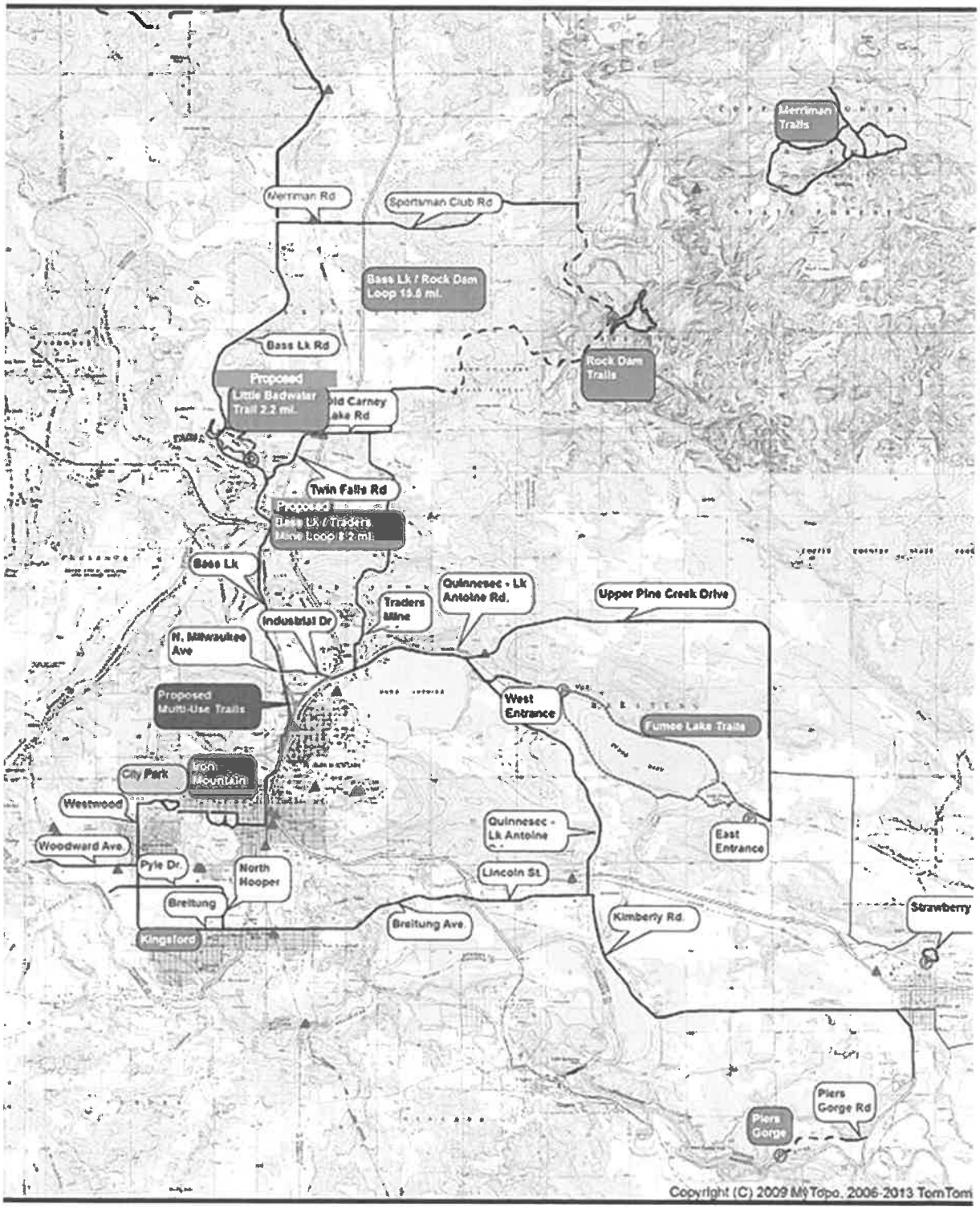

APPENDIX B

2013 Update

Forest Service Trail Accessibility Guidelines (FSTAG)

2013

All Trails and Constructed Features Addressed in the FSTAG and FSORAG that are constructed or altered within the National Forest System shall comply with the FSTAG and FSORAG.

Contents

FSTAG - Scoping Requirements and Technical Provisions:
Contains the scoping requirements, definitions and technical specifications

Appendices:

Overview of FSTAG Implementation Process: A flowchart on how to apply the FSTAG one step at a time. (Best if printed in color.)

Federal Trail Data Standards: Trail Fundamentals

Federal Trail Data Standards: Class Matrix

Forest Service Recreation Site Development Scale Definitions

FSORAG Technical Provisions Referenced in the FSTAG's Technical Provisions
Provisions of the Architectural Barriers Act Accessibility Standards that are referenced in the FSORAG Technical Provisions

Forest Service Trail Accessibility Guidelines
Scoping Requirements, Technical Provisions, and Appendices

TABLE OF CONTENTS

7.0 APPLICATION 3

7.1 Conditions for an Exception. 4

7.2 General Exceptions. 5

7.2.1 General Exception 1. 5
7.2.2 General Exception 2. 5

7.3 Definitions 6

7.4 Technical Provisions 10

7.4.1 Surface. 10
7.4.2 Clear Tread Width. 10
7.4.3 Slope. 10
7.4.4 Resting Intervals. 11
7.4.5 Passing Spaces. 11
7.4.6 Tread Obstacles. 12
7.4.7 Openings. 12
7.4.8 Protruding Objects. 13
7.4.9 Trail Facilities. 13
7.4.10 Trailheads. 13
7.4.11 Trailhead Signs. 14
7.4.12 Gates and Barriers 14

Overview of FSTAG Implementation Process: 15

APPENDIX A: Federal Trail Data Standards (FTDS) – Trail Fundamentals 20

APPENDIX B: Federal Trail Data Standards – Class Matrix 11/08/2011 23

APPENDIX C: FSORAG Technical Provisions 26

APPENDIX D: Provisions of the Architectural Barriers Act Accessibility Standards (ABAAS) 30

FOREST SERVICE TRAIL ACCESSIBILITY GUIDELINES (FSTAG)

Technical Provisions

7.0 APPLICATION

The Forest Service Trail Accessibility Guidelines (FSTAG) provides guidance for maximizing accessibility of trails in the National Forest System, while protecting the unique characteristics of their natural setting. The FSTAG and the Forest Service Outdoor Recreation Accessibility Guidelines (FSORAG) are the legally enforceable standards for use in outdoor recreation areas on the National Forest System for the facilities, routes, and features addressed in these guidelines. Although not legally enforceable outside of the National Forest System, the Guidelines may be used by other entities to define best practices for trails.

These guidelines have been updated to incorporate the supplement to the Architectural Barriers Act Accessibility Standards, the Outdoor Developed Area Accessibility Guidelines (ODAAG), developed by the Architectural and Transportation Barriers Compliance Board (U.S. Access Board). While they incorporate the U.S. Access Board's ODAAG they also ensure the application of equivalent or higher guidelines, in order to comply with other existing Forest Service policies, including universal design, as well as agency terminology and processes.

All trails in the National Forest System that (1) are new or altered; (2) have a Federal Trail Data Standard (FTDS) designation Designed Use of Hiker/Pedestrian; and (3) connect directly to a trailhead or to a trail that currently substantially complies with the FSTAG, shall comply with the FSTAG. Where provided, associated constructed features (such as tent pads, fire rings and pit toilets) located along National Forest System trails shall comply with the Forest Service Outdoor Recreation Accessibility Guidelines (FSORAG).

Side trails or other routes to associated constructed features off a trail are not outdoor recreation access routes. Therefore, they are subject only to section 7 of the FSTAG and do not have to comply with the technical provisions in section 2.0 of the FSORAG that apply to outdoor recreation access routes.

Trailheads and the constructed features at trailheads shall also comply with the applicable technical provisions of the FSORAG and ABAAS. Routes connecting those facilities are to comply with the FSORAG outdoor recreation access route specifications.

These guidelines do not apply to maintenance work (routine or periodic repair of existing trails, recreation sites, or facilities). Where existing individual site features are altered but the floor or ground surface under or around them is not altered, the clear floor or ground space shall not be required to comply with surface and slope

requirements.

The FSTAG and FSORAG became the National Forest System's legal standard for all applicable facilities on May 26, 2006 with the final Federal Register publication of Forest Service Manuals 2330 and 2350. As stated in the Federal Register, these guidelines would be updated periodically to ensure they remain equal to or a higher standard than other guidelines and standards applicable to Federal agencies under the Architectural Barriers Act.

Construction or alteration of all facilities within the National Forest System that are not addressed in the FSORAG or FSTAG shall comply with the applicable requirements of the Architectural Barriers Act Accessibility Standards (ABAAS). The FSTAG, FSORAG and ABAAS are all available at *http://www.fs.fed.us/recreation/accessibility/*.

Boating and fishing facilities, swimming pools, play areas, sports arenas, miniature golf courses, and amusement parks, which are referred to as "recreation facilities" are addressed in Chapter 10 of the ABAAS (*http://www.access-board.gov*).

7.1 Conditions for an Exception.

Where one or more of the following conditions exists on a trail, an "exception" provided in the guidelines for that specific technical requirement can be used where that condition exists. The exception shall not be used on the portion of the trail where the condition does not exist. If no exception is provided for the technical requirement, no exception is allowed. All other appropriate design options should be considered before applying the exception.

Condition for an Exception 1. Where compliance with the technical provision is not practicable due to terrain.

Condition for an Exception 2. Where compliance with the technical provision would fundamentally alter the function or purpose of the facility, trail, or the setting.

Condition for an Exception 3. Where compliance with the technical provision cannot be accomplished with the prevailing construction practices.

Condition for an Exception 4. Where compliance is precluded because the cultural, historic, or significant natural features are eligible for protection under Federal, State, or local law by:

- Endangered Species Act (16 U.S.C. §§ 1531 et seq.);
- National Environmental Policy Act (42 U.S.C. §§ 4321 et seq.);
- National Historic Preservation Act (16 U.S.C. §§ 470 et seq.);
- Wilderness Act (16 U.S.C. §§ 1131 et seq.); or

- Other Federal, State, or local law the purpose of which is to preserve threatened or endangered species; the environment; or archaeological, cultural, historical, or other significant natural features.

7.2 General Exceptions.

The basis for the determination that General Exception 1 or General Exception 2 apply shall be documented and maintained with the records of the construction or alteration project. Documentation shall include the rationale for that determination, which conditions for exception and which exceptions apply, the date of the determination, and the name of the individuals who made the determination. There is no standard format for this documentation; each unit may develop its own format to meet its specific needs.

7.2.1 General Exception 1.

Where a condition in 7.1 prohibits full compliance with a specific requirement in 7.4 on a trail segment, that trail segment shall comply with the specific requirement to the maximum extent practicable.

7.2.2 General Exception 2.

If after applying General Exception 1 it is determined that it is impracticable to provide a trail complying with 7.4, the trail shall not be required to comply with 7.4. Notification of this determination shall be sent to the Access Board. A form is available on the Access Board's Website <*http://.access-board.gov/outdoor*> for optional use. For long-distance trails, this exception applies to the trail segments that are planned for construction or alteration in a given planning period, rather than over the entire length of the trail.

7.2.2.1 Determining Impracticability. The use of General Exception 2 is reasonable where one or more conditions for an exemption in section 7.1 and at least one of the following limiting factors exist:

Limiting Factor 1. The combination of trail running slope (grade) and cross slope exceeds 1:2.5 (40 percent) for over a distance of 20 feet (6m).

Limiting Factor 2. The surface is not firm and stable for a distance of 45 feet or more (14 m).

Limiting Factor 3. The minimum trail width is 12 inches (305 millimeters) or less for a distance of at least 20 feet (6100 mm).

Limiting Factor 4. A trail obstacle of at least 30 inches (770 mm) in height extends across the full width of the trail.

Limiting Factor 5. One or more conditions for an exception exist that result in significant deviations from the technical provisions of section 7.4.1 through 7.4.8 for over 15 percent of the length of the trail.

7.2.2.2 Extent of Impracticability. Where General Exception 2 permits exemption of an entire trail from the requirements of section 7.4.1 through 7.4.8, it may be beneficial to construct a portion of the trail to meet the trail accessibility guidelines. Consider doing so especially if a prominent feature (such as a scenic view, waterfall, or other feature that would be of interest to visitors) is located between the trail terminus and the first extreme environmental barrier and there are few or no significant conditions requiring exceptions on that portion of the trail.

7.3 Definitions

All trail-related definitions used in the FSTAG are from the Forest Service Manual or Handbook, the Forest Service Infra Trails Module, Trail Assessment and Condition Survey (TRACS) reference materials, or are mandated by the Access Board.

"Accessible Trail" is a term to avoid. The technical provisions in section 7.4 of the FSTAG allow for grades up to 12 percent. While such grades are understandable in challenging terrain as hiking paths selected by choice, the general public's expectation of an "accessible" pathway is that it have a gentle grade and other uniform factors. In addition, most trails constructed under the FSTAG use exceptions to some extent in order to maintain the nature of the setting.

Therefore, a trail that has been constructed in accordance with the FSTAG should be advertised as a "trail that complies with the trail accessibility guidelines", rather than as an "accessible trail". Information concerning grades, etc. is to be posted along with other trail information on websites, trailhead signs, and so forth. Each visitor can then select the trail that best meets their recreation experience and expectations.

Alteration. A change in the original purpose, intent, or function of a trail.

Camp Shelter. A partially enclosed structure that provides campers and hikers cover from weather and that does not contain plumbing fixtures or kitchen appliances. Camp shelters are not cabins, which are typically larger and are required to comply with ABAAS section 806 for transient lodging where short term accommodations are provided.

Constructed Features

- **Associated Constructed Feature.** A constructed element associated with a trail that provides support for trail users, but is not a part of the trail tread. Examples include overnight shelters, toilets, fire rings, picnic tables, and tent pads. Refer to the FSORAG for the technical provisions for associated constructed features.

- **Trail Constructed Feature.** A constructed feature that functions as part of the trail tread. Examples include puncheon, trail bridges, boardwalks, waterbars, and switchbacks. For a listing of trail constructed features, refer to the trail documentation available at *http://www.fs.fed.us/recreation/programs/trail-management/index.shtml* or available to Forest Service employees at *http://fsweb.wo.fs.fed.us/rhwr/ibsc/tr-cost.shtml*

Designed Use. The "Managed Use" of a trail that requires the most demanding design, construction, and maintenance parameters. In conjunction with the applicable "Trail Class," designed use determines which design parameters will apply to a trail. It is an FTDS term for the intended use that controls the geometric design of a trail and determines the level to which it should be maintained. There is only one "Designed Use" per trail or trail segment.

Federal Trail Data Standards (FTDS) Standardized terminology that enable national, regional, and State trail managers, and the public, to use mutually understood terminology for recording, retrieving, and applying spatial and tabular information. FTDS make it easier for trail information to be accessed, exchanged, and used by more than one individual, agency, or group. The data standards are available at *http://www.nps.gov/gis/trails/Doc2/Federal_Trail_Data_Standards_Final_20111108.pdf*

Hiker/Pedestrian Trail. A trail with a designed use of hiker/pedestrian that is designed, constructed, and maintained for hiker/pedestrian use.

Limiting Factor. An extreme, uncorrectable environmental barrier that makes the trail beyond the barrier unreachable for many people with mobility limitations.

Maintenance. Routine or periodic repair of trails or trail segments to restore them to the standards to which they were originally designed and built. Maintenance does not change the original purpose, intent, or design of a trail.

Managed Use. An FTDS term for the mode(s) of travel for which a trail is actively managed. Managed uses are the specific types of trail use that are allowed by management decision or intent on a specific trail or portion of a trail. Each trail or trail segment may have more than one "Managed Use." For example, a trail may be managed for both equestrian and hiker/pedestrian use in the summer and for cross-country skiing in the winter.

Outdoor Recreation Access Route (ORAR). A continuous, unobstructed path for pedestrian use that connects elements in an outdoor recreation area such as a picnic area, campground, or trailhead.

Pit Toilet. A primitive outhouse consisting of a toilet riser over a hole dug into the ground or receptacle to receive and naturally decompose human waste. Pit toilets are provided primarily for resource protection and are only constructed at recreation sites with a *Recreation Site Development Scale* level of 2 of less. A pit toilet riser may or may not be surrounded by walls and may or may not have a roof. A pit toilet may be permanently installed or may be moved from one location to another as the pit is filled or the area becomes severely impacted from use. Waste may be disposed of directly into the pit or may be composted.

Practicable. Practicable in this context means the work can be completed within the limits of the applicable *Conditions for an Exception* and results in a useful improvement for all.

Prominent Feature. A natural, cultural, or historic feature located along or adjacent to a trail that is determined by a trail designer or manager to have national, regional, or local

distinction or significance. A prominent feature may be the focal point, main attraction, or destination of a trail, or it may simply be an interesting secondary feature. Examples include but are not limited to boulder outcrops, waterfalls, groupings of old or unique trees or other vegetation, vistas that may or may not be part of a developed overlook, and cultural or historic structures.

Protruding Object. A constructed feature such as a sign that extends into the trail tread more than 4 inches (100 mm) between 27 inches (685 mm) and 80 inches (2030 mm) above the trail tread. Accessibility guidelines for protruding objects do not apply to naturally occurring objects, such as tree branches, or rock ledges. However, safety regulations or Forest Service construction and maintenance standards may define clear space and limit overhangs of natural protruding objects.

Provisions. The sections of accessibility guidelines and standards that explain what is required for specific situations and facilities (parking, picnic tables, trails, etc.)

Recreation Site. An area that is improved, developed, or otherwise identified for recreation and that has a development scale of 0, 1, 2, 3, 4, or 5 (See Forest Service Handbook 2309.13, Chapter10 – Exhibit 01).

Reconstruction. This term is not used in Federal accessibility guidelines or the FSTAG and FSORAG, even though it is used frequently by personnel who work in recreation and trails. For the purposes of the FSTAG and FSORAG, actions are categorized as construction, alteration, or maintenance.

Scoping Requirement. Specifications of where, when, and how much of a constructed features detailed in the accessibility guidelines technical requirements must be met in order to comply with the FSTAG.

Slope. The incline of a surface.

- **Cross Slope.** The percentage of rise to length, which is the difference in elevation, when measuring the trail tread from edge to edge perpendicular to the direction of travel This may be expressed as the percentage of change in elevation or as a ratio of vertical distance to horizontal distance. The percentage is shown in parentheses in these guidelines.
- **Running Slope (Grade).** The ascent or descent of a trail segment expressed as a percentage of its length, which is the difference in elevation of a section of a trail measured parallel to the predominant direction of travel. This may be expressed as a ratio of vertical distance to horizontal distance or as the percentage of change in elevation. The percentage is shown in parentheses in these guidelines.

Surface. The top layer of a trail.

- **Firm.** A firm surface resists deformation by indentations. During the planning process, firmness must be evaluated for noticeable distortion or compression during the seasons for which the surface is managed, under normally occurring weather conditions.

- **Stable**. A surface is not permanently affected by expected weather conditions and can sustain normal wear and tear from the expected use(s) of the area, between planned maintenance.

Technical Requirements. Are the specific numbers, conditions, and measurements that are required to be achieved (percent that must comply, dimensions, reach ranges, grades, trail width, etc.).

Trail. For purposes of the FSTAG and FSORAG, a trail is a pedestrian route developed primarily for outdoor recreational hiking purposes. A pedestrian route provided primarily to connect elements, spaces, or facilities within a site is not a trail; it is an outdoor recreation access route (ORAR).

Trail Class. The prescribed scale of development for a trail, representing its intended design and management standards.

Trail Grade. The ascent or descent of a trail segment expressed as a percentage of its length. When expressed as a ratio of rise to length to the term used is running slope.

Trailhead. For the purpose of the FSTAG a trailhead is an outdoor space that is designated by the entity responsible for administering or maintaining the trail to serve as a primary access point to the trail. The simple junction of two or more trails, or the undeveloped junction of a trail and a road, is not a trailhead.

Trail Segment. The portion of a trail being planned, evaluated, or constructed.

Trail Tread. The portion of a trail upon which traffic moves.

Trail Terminus. For the purpose of the FSTAG the trail terminus is the beginning or ending point of a trail or trail segment, where a trail assessment or trail work begins or ends.

Tread Width. The visible trail surface measured perpendicular to the direction of travel.

- **Clear Tread Width.** The width of the usable trail tread and adjacent usable surface.
- **Minimum Tread Width.** The width of the usable part of the tread width at the narrowest point on a trail.
- **Minimum Trail Width.** The width of the trail tread and the adjacent usable surface at the narrowest point on a trail.

Wheelchair. A device, including one that is a battery-powered, that is designed solely for use by a mobility-impaired person for locomotion and that is suitable for use in an indoor pedestrian area. A person whose disability requires use of a wheelchair or mobility device may use a wheelchair or mobility device that meets both parts of this definition anywhere foot travel is permitted (per 36 CFR 212, FSM 2350, and in Federally designated wilderness under ADA Title V, section 508c).

7.4 Technical Provisions

General: Trails shall comply with 7.4.

7.4.1 Surface.

The trail tread surface, including resting intervals and passing spaces, shall be both firm and stable.

7.4.2 Clear Tread Width.

The clear tread width of the trail shall be at least 36 inches (915 mm).

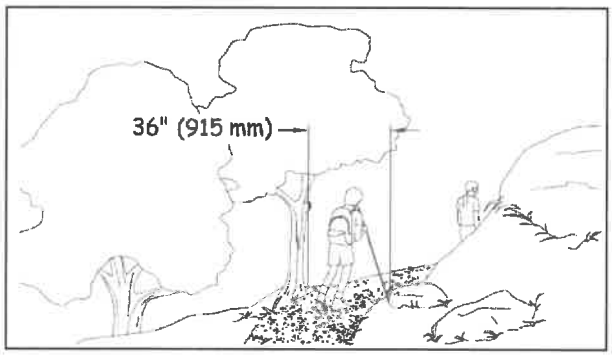

EXCEPTION: Where a condition for an exception prevents achieving the required width, the clear tread width may be reduced to 32 inches (815 mm) minimum. If the condition for an exception prevents achieving the reduced width of 32 inches, comply to the extent practicable.

7.4.3 Slope.

Trail running slopes (grades) and cross slopes shall comply with sections 7.4.3.1 and 7.4.3.2.

7.4.3.1 Running Slope (Grade). The running slope (grade) of trail segments shall comply with this section and shall be consistent over the distances cited.

- Trail running slope (grade) of up to 1:20 (5 percent) is permitted for any distance.
- The running slope of any segment of a trail shall not be steeper than 1:8 (12 percent).
- No more than 30 percent of the total trail length may exceed a running slope (grade) of 1:12 (8.33 percent).
- Where the running slope (grade) of a segment of a trail is steeper than 1:20 (5 percent), the maximum length of the segment shall be in accordance with Table 7.4.3.1, and a resting interval complying with 7.4.4 shall be provided at each end of the segment.

Table 7.4.3.1 Trail Running Slope (Grade) and Resting Intervals

Running Slope of Trail Segment		Maximum Length of Segment Between Resting Intervals
Steeper Than	But Not Steeper Than	
1:20 (5 percent)	1:12 (8.33 percent)	200 feet (61 m)
1:12 (8.33 percent)	1:10 (10 percent)	30 feet (9 m)
1:10 (10 percent)	1:8 (12 percent)	10 feet (3050 mm)

7.4.3.2 Cross Slope. The cross slope shall not exceed 1:20 (5 percent). Where the surface is paved or is elevated above the natural ground, the cross slope shall not be steeper than 1:48 (2 percent).

7.4.4 Resting Intervals.
Resting intervals shall comply with 7.4.4. Where the trail grade exceeds 1:20 (5 percent), resting intervals shall be provided as specified in Table 7.4.3.1.

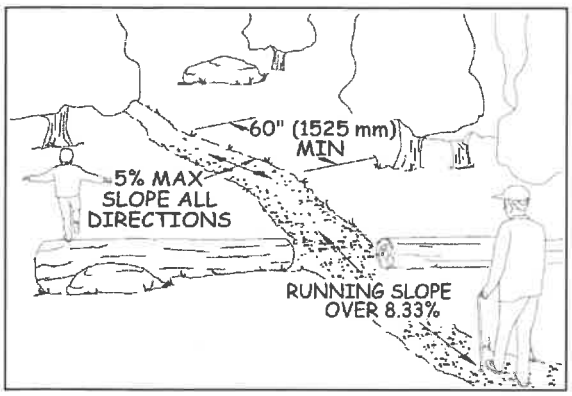

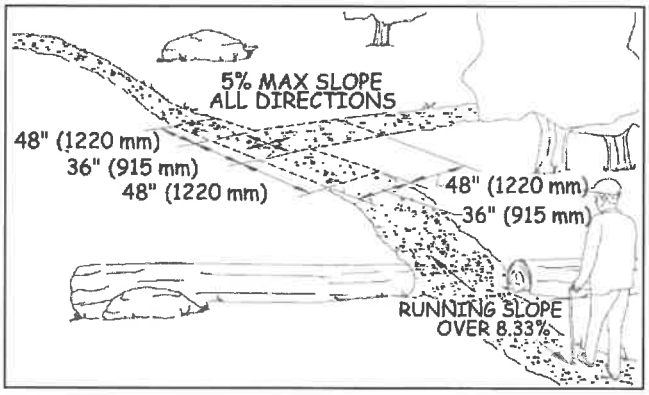

7.4.4.1 Length. The resting interval length shall be 60 inches (1525 mm) long minimum.

7.4.4.2 Width. Where resting intervals are provided within the trail tread, resting intervals shall be at least as wide as the widest segment of the trail tread leading to the resting interval. Where resting intervals are provided adjacent to the trail tread, the resting interval clear width shall be 36 inches (915 mm) minimum.

7.4.4.3 Slope. The slope of a resting interval shall not exceed 1:20 (5 percent) in any direction. Where the surface is paved or is elevated above the natural ground, the slope shall not be steeper than 1:48 (2 percent) in any direction.

7.4.4.4 Turning Space. Where resting intervals are provided adjacent to the trail tread, a turning space complying with ABAAS section 304.3.2 shall be provided. Vertical alignment between the trail tread, turning space, and resting interval shall be nominally level. The trail tread, turning space, and resting interval may overlap.

7.4.5 Passing Spaces.
Trails with a clear tread width less than 60 inches (1525 mm) shall provide passing spaces complying with 7.4.5 at intervals of 1000 feet (300 m) maximum. A passing space must also be provided at the end of any segment of trail that meets the requirements of 7.4, if the full length of the trail does not meet the requirements. Passing spaces and resting intervals may coincide or overlap.

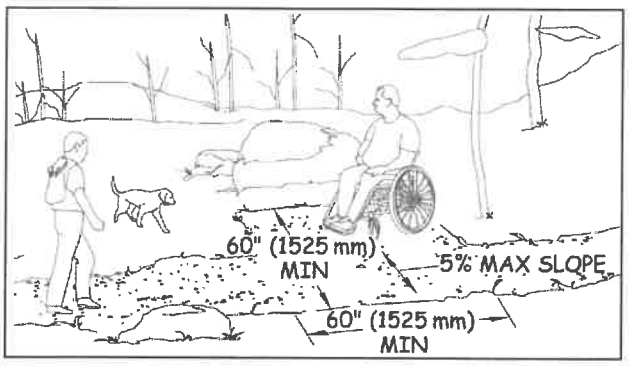

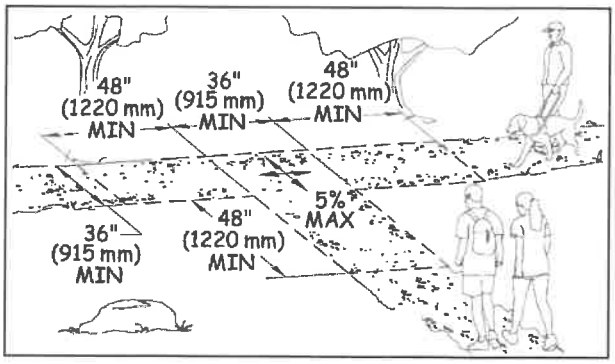

7.4.5.1 Size. The passing space shall be either:

- A space 60 inches (1525 mm) minimum by 60 inches (1525 mm) minimum; or
- The intersection of two trails providing a T-shaped space complying with ABAAS section 304.3.2 where the base and the arms of the T-shaped space extend 48 inches (1220 mm) minimum beyond the intersection. Vertical alignment at the intersection of the trails that form the T-shaped space shall be nominally level.

7.4.5.2 Slope. The cross slope of a passing space shall not exceed 1:20 (5 percent) in any direction.

7.4.5.3 Non-complying Segment Ends. Where a segment of the trail does not comply with 7.4, a passing space shall be located at the end of each adjacent trail segment that does comply with 7.4.

7.4.6 Tread Obstacles.
Tread obstacles on trails shall not exceed 2 inches (50 mm) in height measured vertically to the highest point. Where the trail surface is paved or is elevated above the natural ground, tread obstacles shall not exceed ½ inch (13 mm) in height measured vertically to the highest point.

7.4.7 Openings.
Openings in trail tread surfaces, trail resting spaces, and trail passing spaces shall be small enough to prevent passage of a 1/2 inch- (13 mm-) diameter sphere. Where possible, elongated openings should be placed perpendicular, or as close to perpendicular as possible, to the dominant direction of travel.

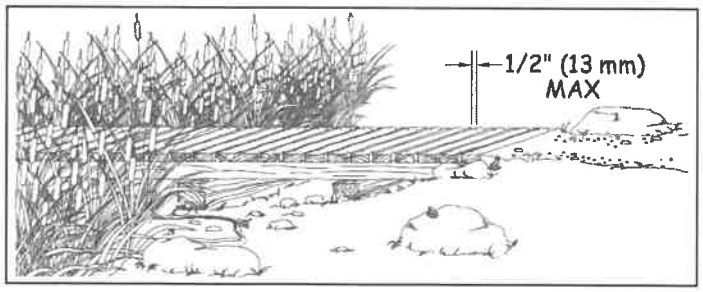

Exception: Where openings that do not permit the passage of a ½ inch (6.4 mm) sphere cannot be provided due to a condition for an exception, openings that do not permit passage of a ¾ inch (19 mm) sphere shall be permitted.

7.4.8 Protruding Objects.
Constructed features, including signs, shall not extend into the trail tread more than 4 inches (100 mm) between 27 inches (685 mm) and 80 inches (2030 mm) above the surface of the trail.

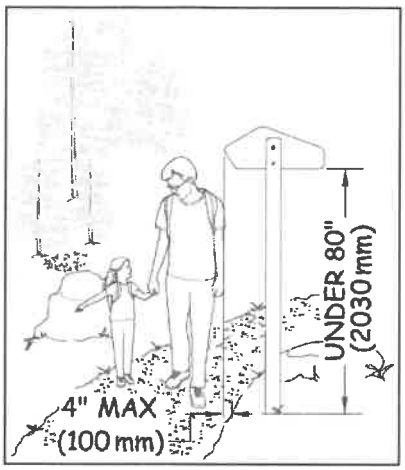

7.4.9 Trail Facilities.
Where provided on trails, facilities shall comply with the applicable provisions of the FSORAG. ORARs are not required at or between facilities on trails.

> **Exception.** When the surface of the required clear ground space for trail facilities is not paved or is not elevated above the natural ground, slopes not steeper than 1:20 (5 percent) shall be permitted where necessary for drainage.

7.4.10 Trailheads.
Trailheads shall comply with 7.4.10.

> **7.4.10.1 Outdoor Constructed Features.** Where provided within trailheads each outdoor constructed features such as parking spaces, toilets, or camp sites shall comply with the applicable portions of the FSORAG and ABAAS.
>
> **7.4.10.2 Outdoor Recreation Access Routes (ORARs).**
> At least one outdoor recreation access route complying with FSORAG section 2.0 shall connect the following places at trailheads:
> - Accessible parking spaces or other arrival point;
> - Starting point of the trail; and
> - Accessible outdoor constructed features, elements, spaces, and facilities within the trailhead.
>
> **Exception 1.** In alterations to existing trailheads, where a condition for exception prohibits compliance with a technical provision, the ORAR shall comply with FSORAG 2.0 to maximum extent practicable.
>
> **Exception 2.** Where elements, spaces, or outdoor constructed features are altered at trailheads but the circulation path is not altered, an outdoor recreation access route shall not be required.

7.4.11 Trailhead Signs.
Where new trailhead information signs are provided at trailheads on newly constructed or altered trails, they shall comply with 7.4.11.

7.4.11.1 Clear Space. Trailhead signs shall be located centered at the back of a 30- by 48-inch (760- by 1,220-millimeter) minimum clear floor or ground space. The clear space shall not overlap the trail width but may overlap a resting space or passing space. The slope of the clear space shall not exceed 1:20 (5 percent) in any direction.

7.4.11.2 Sign Contents. Where new trail information signs are provided at trailheads on newly constructed or altered trails, regardless of whether the trail is accessible, the signs shall include at minimum the following information:

- Length of the trail or trail segment
- Surface type
- Typical and minimum tread width
- Typical and maximum running slope
- Typical and maximum cross slope
- A statement that the posted information reflects the condition of the trail when it was constructed or assessed, including the date of the construction or assessment

Where more extensive trail information is provided (*e.g.,* an aerial map of the trail and related facilities), the location of specific trail features and obstacles that do not comply with the technical provisions in 7.4 should be identified and a profile of the trail grade should be included.

7.4.11.3 Reach Ranges. If materials need to be obtained from or manipulated on a sign or kiosk, the sign or kiosk shall be designed to meet the reach ranges in section 308 of the ABAAS.

7.4.12 Gates and Barriers.
Where gates or barriers are constructed to control access to trails, gates and barriers shall comply with 7.4.12.

7.4.12.1 Clear Width. Gate openings and openings in barriers for hiker passage shall provide a clear width of 36 inches (915 mm), complying with ODAAG, section 1017.3 Clear Tread Width.

7.4.12.2 Gate Hardware. Gate hardware shall comply with operable controls requirements in ABAAS section 309.4 and 404.2.7.

Overview of FSTAG Implementation Process:

A flowchart on how to apply the FSTAG one step at a time. (Best if printed in color.)

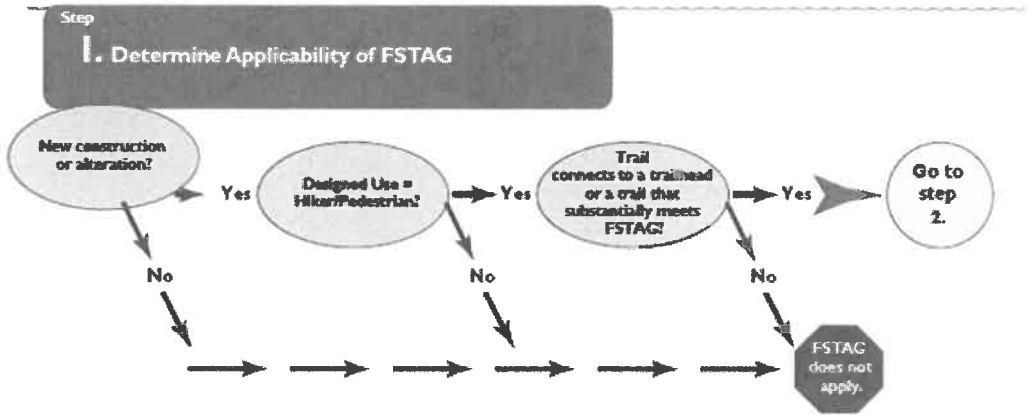

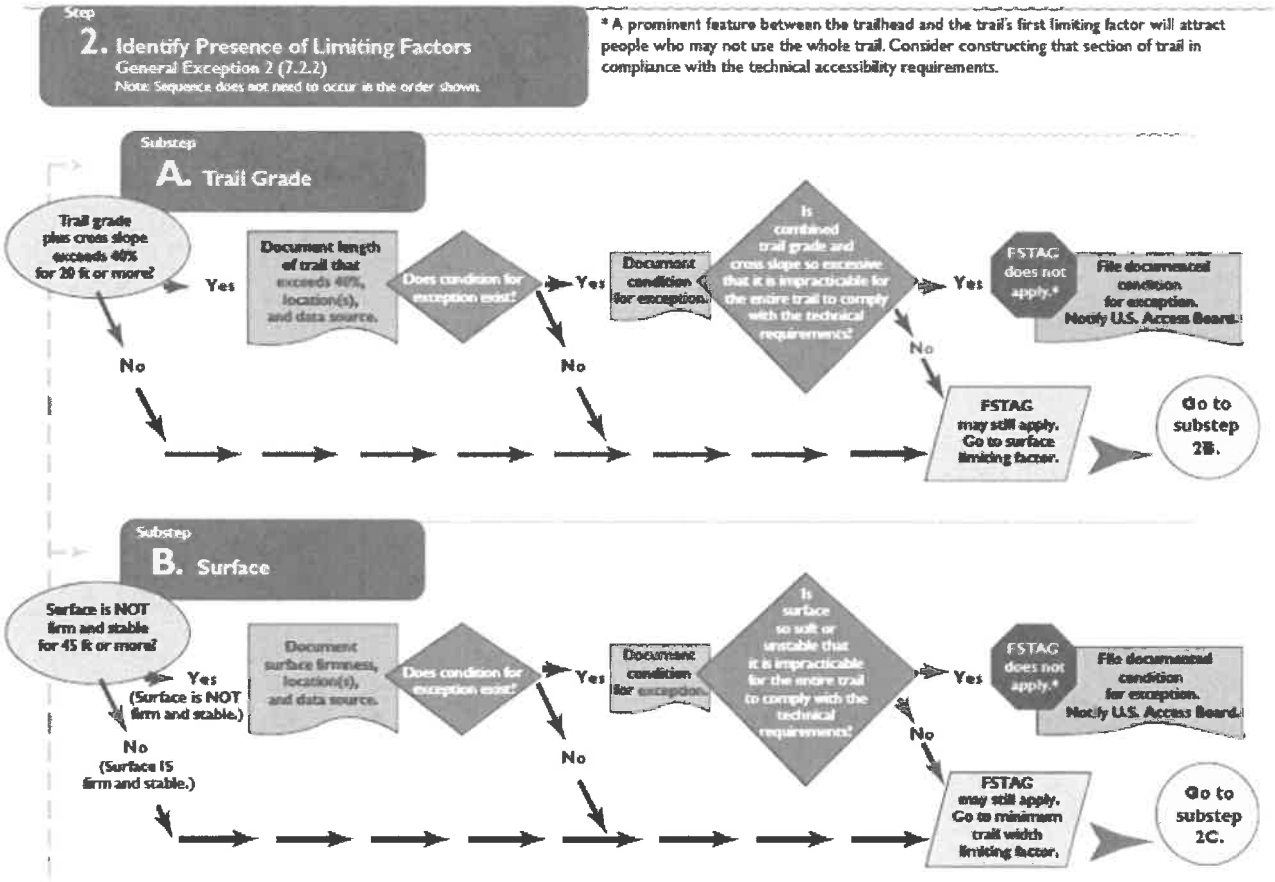

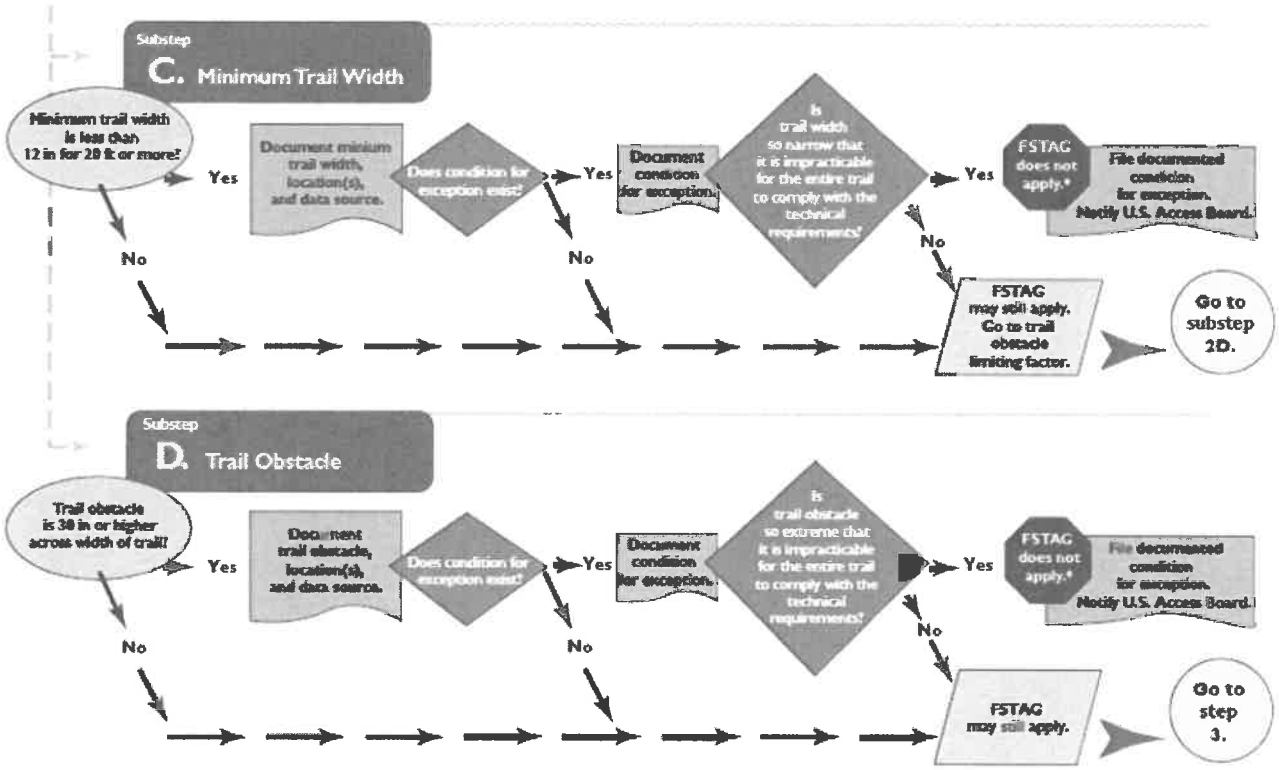
Substep
C. Minimum Trail Width
Minimum trail width is less than 12 in for 20 ft or more?
Yes
No
Document minium trail width, location(s), and data source.
Does condition for exception exist?
Yes
No
Document condition for exception.
Is trail width so narrow that it is impracticable for the entire trail to comply with the technical requirements?
Yes
No
FSTAG does not apply.*
File documented condition for exception. Notify U.S. Access Board.
FSTAG may still apply. Go to trail obstacle limiting factor.
Go to substep 2D.
Substep
D. Trail Obstacle
Trail obstacle is 30 in or higher across width of trail?
Yes
No
Document trail obstacle, location(s), and data source.
Does condition for exception exist?
Yes
No
Document condition for exception.
Is trail obstacle so extreme that it is impracticable for the entire trail to comply with the technical requirements?
Yes
No
FSTAG does not apply.*
File documented condition for exception. Notify U.S. Access Board.
FSTAG may still apply.
Go to step 3.

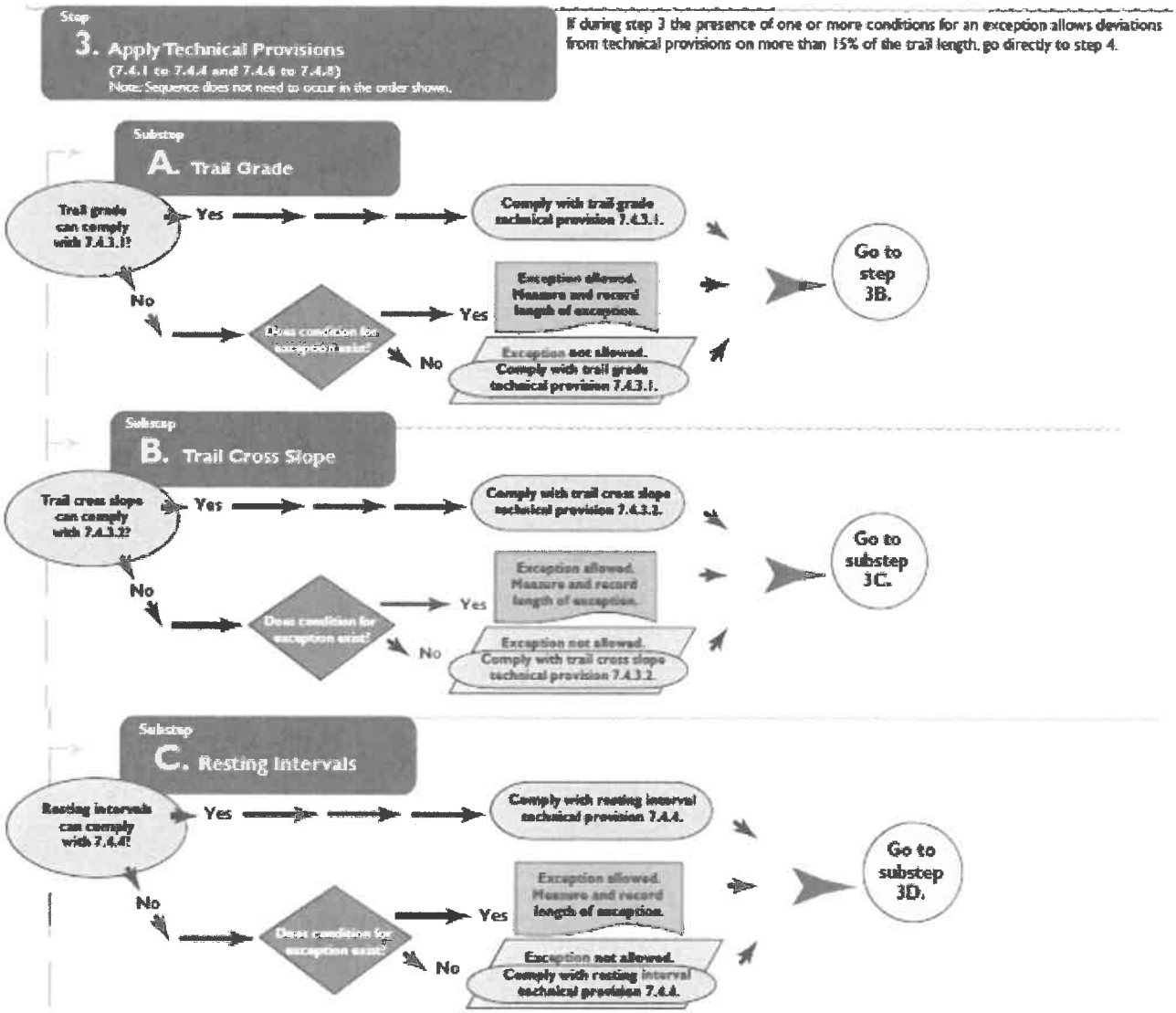
Step
3. Apply Technical Provisions
(7.4.1 to 7.4.4 and 7.4.6 to 7.4.8)
Note: Sequence does not need to occur in the order shown.
If during step 3 the presence of one or more conditions for an exception allows deviations from technical provisions on more than 15% of the trail length, go directly to step 4.
Substep
A. Trail Grade
Trail grade can comply with 7.4.3.1?
Yes
Comply with trail grade technical provision 7.4.3.1.
No
Does condition for exception exist?
Yes
Exception allowed. Measure and record length of exception.
No
Exception not allowed. Comply with trail grade technical provision 7.4.3.1.
Go to step 3B.
Substep
B. Trail Cross Slope
Trail cross slope can comply with 7.4.3.2?
Yes
Comply with trail cross slope technical provision 7.4.3.2.
No
Does condition for exception exist?
Yes
Exception allowed. Measure and record length of exception.
No
Exception not allowed. Comply with trail cross slope technical provision 7.4.3.2.
Go to substep 3C.
Substep
C. Resting Intervals
Resting intervals can comply with 7.4.4?
Yes
Comply with resting interval technical provision 7.4.4.
No
Does condition for exception exist?
Yes
Exception allowed. Measure and record length of exception.
No
Exception not allowed. Comply with resting interval technical provision 7.4.4.
Go to substep 3D.

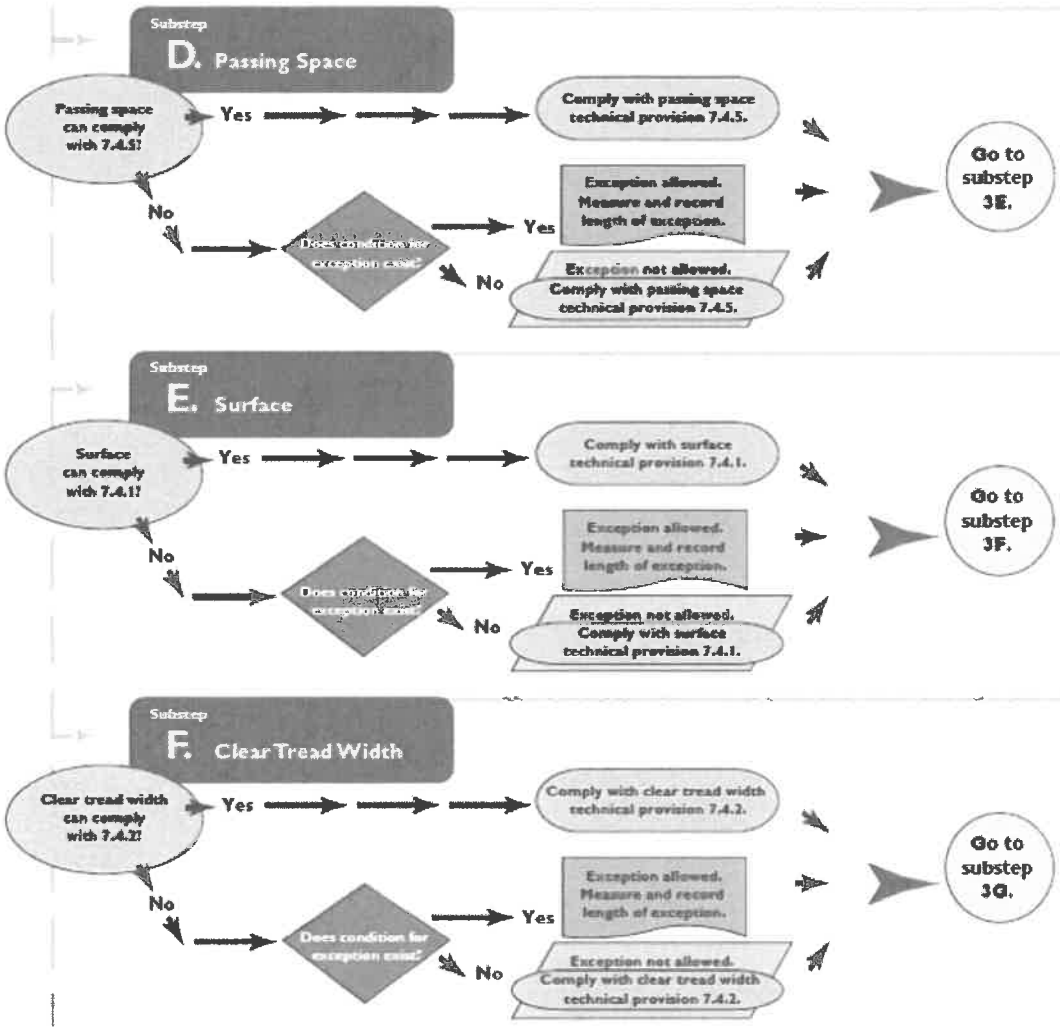
Substep
D. Passing Space
Passing space can comply with 7.4.5?
Yes
Comply with passing space technical provision 7.4.5.
No
Does condition for exception exist?
Yes
Exception allowed. Measure and record length of exception.
No
Exception not allowed. Comply with passing space technical provision 7.4.5.
Go to substep 3E.
Substep
E. Surface
Surface can comply with 7.4.1?
Yes
Comply with surface technical provision 7.4.1.
No
Does condition for exception exist?
Yes
Exception allowed. Measure and record length of exception.
No
Exception not allowed. Comply with surface technical provision 7.4.1.
Go to substep 3F.
Substep
F. Clear Tread Width
Clear tread width can comply with 7.4.2?
Yes
Comply with clear tread width technical provision 7.4.2.
No
Does condition for exception exist?
Yes
Exception allowed. Measure and record length of exception.
No
Exception not allowed. Comply with clear tread width technical provision 7.4.2.
Go to substep 3G.

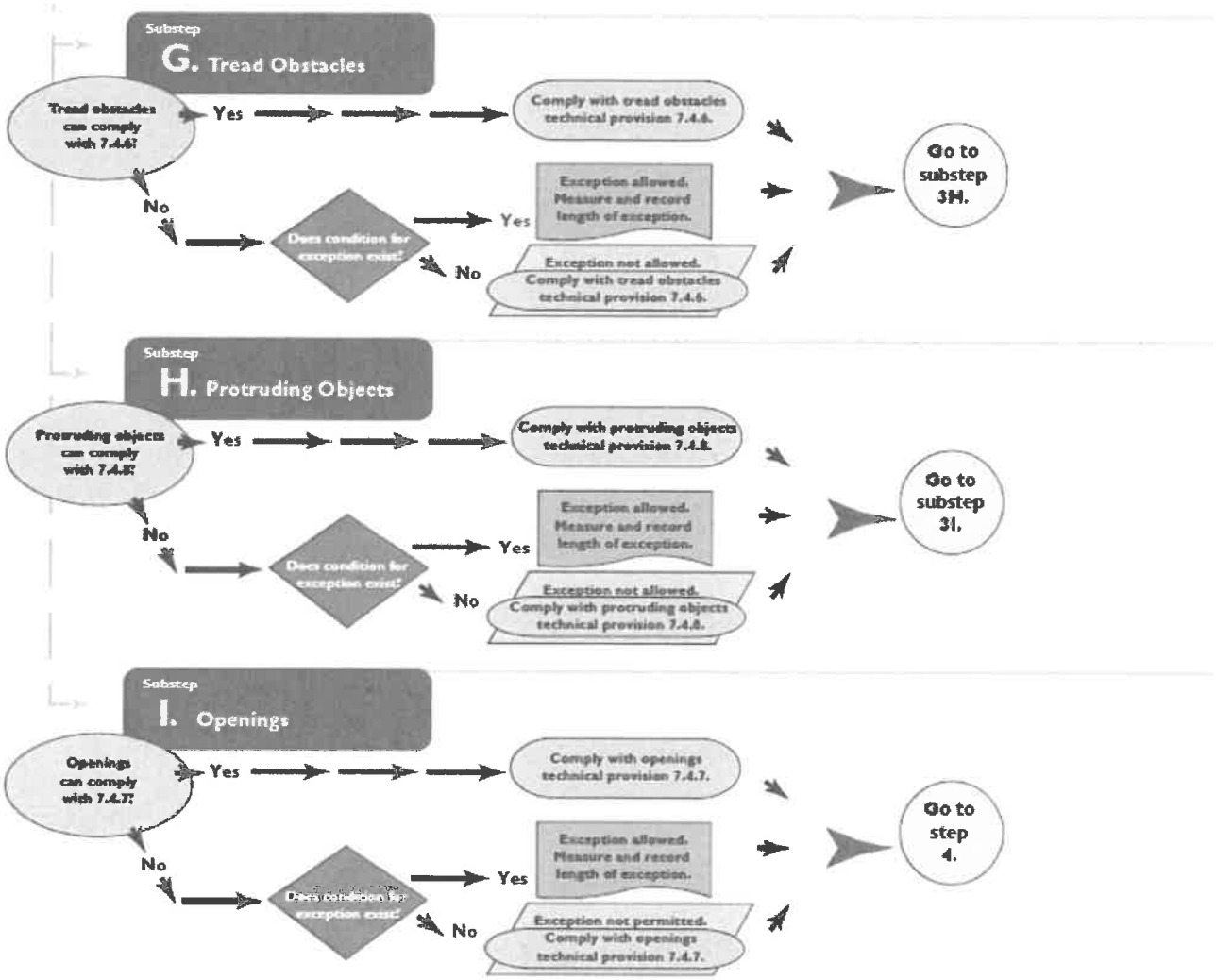

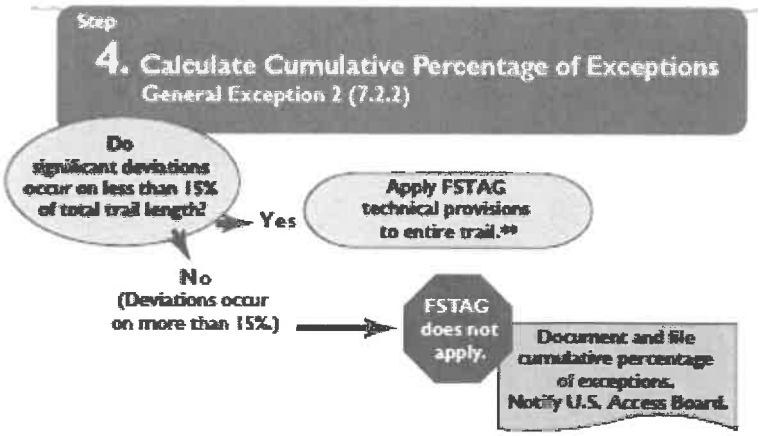

**Refer to FSTAG for detailed instructions, definitions, and technical provisions 7.0 through 7.3

APPENDIX A: Federal Trail Data Standards (FTDS) – Trail Fundamentals

11/08/2011

Trail Type ▪ Trail Class ▪ Managed Use ▪ Designed Use

The Federal Trail Fundamentals include four concepts that are the cornerstones of effective trail planning and management:

- Trail Type
- Trail Class
- Managed Use
- Designed Use

Identify the four Trail Fundamentals for each trail or trail segment based on applicable land management plan direction, travel management decisions, trail-specific decisions, and other related direction.

Trail Fundamentals provide an integrated means to consistently record and communicate the intended design and management guidelines for trail design, construction, maintenance and use.

Trail Type

A category that reflects the predominant trail surface and general mode of travel accommodated by a trail

There are three Trails Types:

Standard/Terra Trail: *A trail that has a surface consisting predominantly of the ground and that is designed and managed to accommodate use on that surface.*

Snow Trail: *A trail that has a surface consisting predominantly of snow or ice and that is designed and managed to accommodate use on that surface.*

Water Trail: *A trail that has a surface consisting predominantly of water (but may include land-based portages) and that is designed and managed to accommodate use on that surface.*

This management concept allows managers to identify trail-specific Design Parameters or technical specifications, management needs, and the cost of managing the trail for particular uses and/or seasons by trail or trail segment.

1. Inventory trails and identify the appropriate Design Parameters or technical specifications, management needs, and management costs for trail using the Trail Types.
2. Identify only one Trail Type per trail.
3. Identify the Trail Type for each trail based on applicable land management plan direction, travel management decisions, trail-specific decisions, and other related direction.
4. Inventory both trails and Trail Types when two trails overlap, for example, when a Snow Trail overlaps a Standard Terra Trail.

Trail Class

The prescribed scale of development for a trail, representing its intended design and management standards.

Trail Classes are general categories reflecting trail development scale, arranged along a continuum.

There are five Trail Classes, ranging from the least developed (Trail Class 1) to the most developed (Trail Class 5):

Trail Class 1: Minimally Developed
Trail Class 2: Moderately Developed
Trail Class 3: Developed
Trail Class 4: Highly Developed
Trail Class 5: Fully Developed

Use Trail Classes to inventory trails and to identify the applicable Design Parameters or technical specifications and the costs for meeting trail management standards.

1. Identify only one Trail Class per trail or trail segment.
2. Trail Class descriptors reflect typical attributes of trails in each class. Local deviations from any Trail Class descriptor may be established based on trail-specific conditions, topography, or other factors, provided that the deviations are consistent with the general intent of the applicable Trail Class.
3. There is a direct relationship between Trail Class and Managed Uses: generally, one cannot be determined without consideration of the other.
4. Identify the appropriate Trail Class for each trail or trail segment based on the management intent in the applicable land management plan, travel management decisions, trail-specific decisions, and other related direction. Apply the Trail Class that most closely reflects the management intent for the trail or trail segment, which may or may not reflect the current condition of the trail.

For specifics on each Trail Class, refer to the National Trail Management Class matrix.

Managed Use

A mode of travel that is <u>actively</u> managed and appropriate on a trail, based on its design and management.

1. Managed Use indicates management intent to accommodate a specific use.
2. There can be more than one Managed Use per trail or trail segment.
3. The Managed Uses for a trail are usually a small subset of all the allowed uses on the trail, that is, uses that are allowed unless specifically prohibited. For example, on a trail that is closed to all motorized use but open to all non-motorized use, the Managed Uses could be Hiker/Pedestrian and Pack and Saddle. The allowed uses, however, would also include bicycles and all other non-motorized uses.
4. Identify the Managed Uses for each trail or trail segment based on applicable land management plan direction, travel management decisions, trail-specific decisions, and other related direction.
5. There is a direct relationship between Managed Use and Trail Class: generally, one cannot be determined without consideration of the other. Not all Trail Classes are appropriate for all Managed Uses. For guidance on the potential appropriateness of each Trail Class to each Managed Use, refer to agency-specific guidelines and reference material.

Designed Use

The Managed Use of a trail that requires the most demanding design, construction, and maintenance parameters and that, in conjunction with the applicable Trail Class, determines which Design Parameters or technical specifications will apply to a trail.

1. There is only one Designed Use per trail or trail segment. Although a trail or trail segment may have more than one Managed Use and numerous uses may be allowed, only one Managed Use is identified as the design driver or Designed Use.
2. Determine the Designed Use for a trail or trail segment from the Managed Uses identified for that trail. When making this determination, consider all Managed Uses that occur during all seasons of use of the trail or trail segment. Assess any essential or limiting geometry for the Managed Uses of the trail or trail segment to determine whether any trail-specific adjustments are necessary to the applicable Design Parameters or technical specifications.
    a. In some situations, when there is more than one Managed Use identified for a trail, the Designed Use may be readily apparent. For example, on a trail with Managed Uses of all-terrain vehicle and Motorcycle, all-terrain vehicle use would be the Designed Use because this use requires wider tread widths and has lower tolerances for surface obstacles and maximum trail grades.
    b. In other situations involving more than one Managed Use, the Designed Use may not be readily apparent, as is often the case when there are fewer differences between the applicable sets of Design Parameters than in the example above. For example, on a trail that is actively managed for hiker and pedestrian, pack and saddle, and bicycle use, pack and saddle use would likely be the Designed Use because of the three Managed Uses, pack and saddle use generally has the most limiting design requirements. While the Bicycle Design Parameters are very similar to the Pack and Saddle Design Parameters, the Design Parameters or technical specifications for this trail may need to be adjusted to accommodate bicycles.

Designed Use / Managed Use Types*

Hiker / Pedestrian
Pack and Saddle
Bicycle
Motorcycle
All Terrain Vehicle
Four-Wheel Drive Vehicle > 50" in Width
Cross-Country Ski
Dog Sled
Snowshoe
Snowmobile
Motorized Watercraft
Non-Motorized Watercraft

* Refer to agency-specific guidance regarding which of the Designed Uses and Managed Uses listed above are being used by a particular agency.

APPENDIX B: Federal Trail Data Standards – Class Matrix

11/08/2011

Trail Classes are general categories reflecting trail development scale, arranged along a continuum. The Trail Class identified for a trail prescribes its development scale, representing its intended design and management standards.[1] Local deviations from any Trail Class descriptor may be established based on trail-specific conditions, topography, or other factors, provided that the deviations do not undermine the general intent of the applicable Trail Class.

Identify the appropriate Trail Class for each trail or trail segment based on the management intent in the applicable land management plan, travel management direction, trail-specific decisions, and other related direction. Apply the Trail Class that most closely matches the management intent for the trail or trail segment, which may or may not reflect the current condition of the trail.

Trail Attributes	**Trail Class 1** Minimally Developed	**Trail Class 2** Moderately Developed	**Trail Class 3** Developed	**Trail Class 4** Highly Developed	**Trail Class 5** Fully Developed
Tread & Traffic Flow	• Tread intermittent and often indistinct. • May require route finding. • Single lane, with no allowances constructed for passing. • Predominantly native materials.	• Tread continuous and discernible, but narrow and rough. • Single lane, with minor allowances constructed for passing. • Typically native materials.	• Tread continuous and obvious. • Single lane, with allowances constructed for passing where required by traffic volumes in places where there is no reasonable opportunity to pass. • Native or imported materials.	• Tread wide and relatively smooth , with few irregularities. • Single lane, with allowances constructed for passing where required by traffic volumes in places where there is no reasonable opportunity to pass. • Double lane where traffic volumes are high and passing is frequent. • Native or imported materials. • May be hardened.	• Tread wide, firm, stable, and generally uniform • Single lane, with frequent turnouts where traffic volume is low to moderate. • Double lane where traffic volume is moderate to high. • Commonly hardened with asphalt or other imported material.
Obstacles	• Obstacles common, naturally ocurring, often substantial , and intended to provide increased challenge. • Narrow passages; brush, steep grades, rocks and logs present.	• Obstacles may be common, substantial, and intended to provide increased challenge. • Blockages cleared to define route and protect resources. • Vegetation may encroach into trailway.	• Obstacles may be common, but not substantial or intended to provide challenge. • Vegetation cleared outside of trailway.	• Obstacles infrequent and insubstantial . • Vegetation cleared outside of trailway.	• Obstacles not present • Grades typically < 8%

Trail Attributes	Trail Class 1 Minimally Developed	Trail Class 2 Moderately Developed	Trail Class 3 Developed	Trail Class 4 Highly Developed	Trail Class 5 Fully Developed
Constructed Features & Trail Elements	• Structures minimal to non-existent. • Drainage typically provided without structures. • Natural fords. • Typically no bridges.	• Structures of limited size, scale, and quantity; typically constructed of native materials. • Structures adequate to protect trail infrastructure and resources. • Natural fords . • Bridges as needed for resource protection and appropriate access.	• Structures may be common and substantial; constructed of imported or native materials. • Natural or constructed fords. • Bridges as needed for resource protection and appropriate access.	• Structures frequent and substantial; typically constructed of imported materials. • Contructed or natural fords. • Bridges as needed for resource protection and user convenience. • Trailside amenities may be present.	• Structures frequent or continuous; typically constructed of imported materials. • May include bridges, boardwalks, curbs, handrails, trailside amenities, and similar features.
Signs[2]	• Route identification signing limited to junctions. • Route markers present when trail location is not evident. • Regulatory and resource protection signing infrequent. • Destination signing, unless required, generally not present . • Information and interpretive signing generally not present.	• Route identification signing limited to junctions. • Route markers present when trail location is not evident. • Regulatory and resource protection signing infrequent . • Destination signing typically infrequent outside of wilderness; generally not present in wilderness areas. • Information and interpretive signing uncommon.	• Route identification signing at junctions and as needed for user reassurance. • Route markers as needed for user reassurance • Regulatory and resource protection signing may be common. • Destination signing likely outside of wilderness; generally not present in wilderness areas • Information and interpretive signs may be present outside of wilderness .	• Route identification signing at junctions and as needed for user reassurance. • Route markers as needed for user reassurance. • Regulatory and resource protection signing common. • Destination signing common outside of wilderness; generally not present in wilderness areas. • Information and interpretive signs may be common outside wilderness areas. • Accessibility information likely displayed at trailhead.	• Route identification signing at junctions and for user reassurance. • Route markers as needed for user reassurance. • Regulatory and resource protection signing common. • Destination signing common. • Information and interpretive signs common. • Accessibility information likely displayed at trailhead.

Trail Attributes	Trail Class 1 Minimally Developed	Trail Class 2 Moderately Developed	Trail Class 3 Developed	Trail Class 4 Highly Developed	Trail Class 5 Fully Developed
Typical Recreation Environs & Experience[3]	• Natural and unmodified. • ROS: Typically Primitive to Roaded Natural. • WROS: Typically Primitive to Semi-Primitive .	• Natural and essentially unmodified. • ROS: Typically Primitive to Roaded Natural. • WROS: Typically Primitive to Semi-Primitive.	• Natural and primarily unmodified. • ROS: Typically Primitive to Roaded Natural. • WROS: Typically Semi-Primitive to Transition.	• May be modified. • ROS: Typically Semi-Primitive to Rural. • WROS: Typically Portal or Transition.	• May be highly modified. • Commonly associated with visitor centers or high-use recreation sites. • ROS: Typically Roaded Natural to Urban. • Generally not present in wilderness areas.

[1] For management standards, potential appropriateness of Trail Classes for Managed Uses, technical specifications by Trail Class and Designed Use, and other related guidance, refer to agency-specific guidelines and reference material.

[2] For standards and guidelines for the use of signs and posters along trails, refer to agency-specific guidelines.

[3] The National Trail Management Class matrix shows the combinations of Trail Class and Recreation Opportunity Spectrum (ROS) or Wilderness Recreation Opportunity Spectrum (WROS) settings that commonly occur, although trails in all Trail Classes may and do occur in all settings. For guidance on the application of the ROS and WROS, refer to agency-specific guidelines.

APPENDIX C: FSORAG Technical Provisions

Referenced in the FSTAG's Technical Provisions

4.3 Tent Pads and Tent Platforms

4.3.1 General. Tent platforms are not required. Where provided, tent pads and tent platforms at single camping units shall comply with section 4.6 and shall be connected to an ORAR complying with section 2.0. Where camping units contain more than one tent pad or tent platform, at least 20 percent, but not less than two, of the tent pads or tent platforms shall comply with section 4.3.

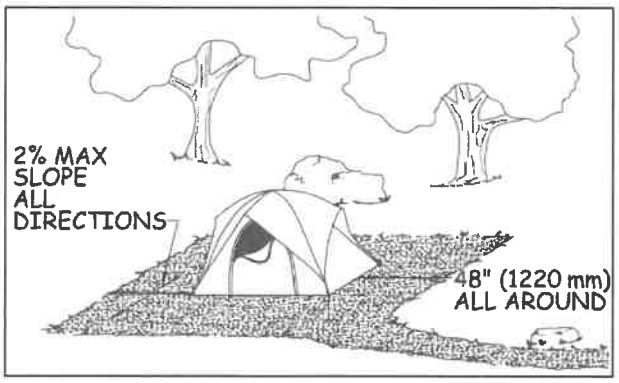

4.3.2 Clear Floor or Ground Space. Tent pads and tent platforms shall have clear floor or ground space surrounding the tent that is at least 48 inches (1220 mm) wide. This space shall not overlap the ORAR.

> **Exception.** Where a condition for exception in section 1.1 prohibits full compliance, the clear floor or ground space shall comply with 4.3.2 to the extent practicable.

4.3.3 Slope. The slope of tent pads and tent platforms shall not exceed 1:48 (2 percent) in any direction.

> **Exception.** When the surface is not paved or is not elevated above the natural ground, slopes not steeper than 1:33 (3 percent) shall be permitted where necessary for drainage.

4.3.4 Tent Pad or Platform Surface. Tent pads and platforms shall have a surface that is firm and stable and is designed to allow use of tent stakes and other tent securing devices.

> **Exception.** Where a condition for exception in section 1.1 prohibits full compliance, the surface shall comply with 4.3.4 to the extent practicable.

4.3.5 Transfer Height. Tent platform surfaces that are not the same elevation as the ORAR shall be between 17 inches (430 mm) minimum and 19 inches (485 mm) maximum above the floor or ground surface adjacent to the ORAR to facilitate transfer from a wheelchair to the tent platform.

5.1 Camp Shelters

5.1.1. General. Camp shelters at single camping units shall comply with 5.1. Where camping units contain more than one camp shelter, at least 20 percent, but not less than two, of the camp shelters shall comply with section 6.1. Camp shelters located on trails shall be connected to other constructed features in the unit by a trail complying with the FSTAG. Camp shelters located in a campground, not on a trail, shall be connected to other constructed features by an ORAR complying with section 2.0.

5.1.2 Level or Sloped Entry. Camp shelters providing roll-in access shall have a level or sloped entry that complies with the FSORAG Outdoor Recreation Access Route technical provisions if the camp shelter is in a campground with a development level of 3 or higher. If the camp shelter is located off a trail, the sloped entry is to comply with the FSTAG Trail provisions.

5.1.3 Slope. The slope of the surface of the clear floor or ground space inside the camp shelter shall not be steeper than 1:48 (2 percent) in all directions.

5.1.4 Turning Space. Where the camp shelter floor is not elevated above the trail or ORAR, as applicable, a turning space complying with ABAAS section 304.3 shall be provided.

5.1.5 Floor Height. Where the floor at the entrance to the camp shelter is elevated above the ground surface, the floor shall be 17 (430 mm) high minimum to19 inches (485 mm) high maximum measured from the clear ground space to the floor surface inside the camp shelter.

5.1.6 Clear Floor or Ground Space. A clear floor or ground space at least 36 inches (915 mm) by 48 inches (1220 mm) shall be provided parallel at the elevated entrance to the camp shelter. One full unobstructed side of the clear ground space shall adjoin or overlap the trail or ORAR, as applicable, or another clear ground space.

5.1.7 Surface. The surface of the clear ground space shall be firm and stable.

5.1.8 Slope. The slope of the surface of the clear ground space shall not be steeper than 1:48 in any direction.

> **Exception:** When the surface is not paved or is not elevated above the natural ground, slopes not steeper than 1:20 (5 percent) shall be permitted where necessary for drainage.

5.1.9 Doors. Where provided, doors shall comply with ABAAS section 404. The door shall not swing into or otherwise obstruct the clear floor or ground space or the turning space required by 5.1.4

5.3 Pit Toilets

5.3.1 General. Pit toilets may only be provided in FS recreation sites with **a** *Recreation Site Development Scale* level of 2 or less or at remote cabin locations. All pit toilets shall comply with section 5.3 and be connected to an ORAR complying with section 2.0. Where pit toilets are constructed in sites that are not accessed by motor vehicles, the pit toilet and all constructed features in the site shall be connected by trail segments complying with the FSTAG.

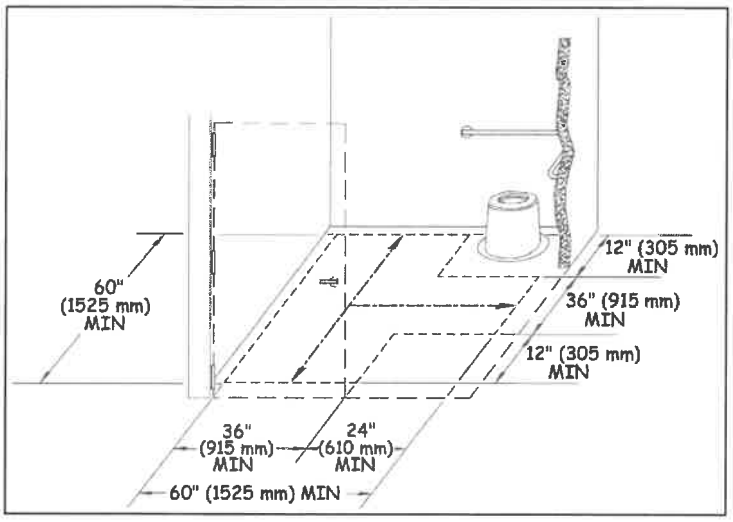

5.3.2 Turning Space and Clear Floor or Ground Space. Turning space and clear floor or ground space complying with 5.3 shall be provided at pit toilets.

5.3.2.1 Size. The clear floor or ground space shall be 60 inches (1525 mm) wide minimum measured parallel with the back of the pit toilet, and 56 inches (1420 mm) deep minimum measured parallel to the sides of the pit toilet. The turning space shall be at least 60 inches (1,525 millimeters) in diameter or T-shaped with a minimum 60- by 36-inch (1,525 by 915 millimeter) arm and a minimum 36-inch (915 millimeter) -wide by 24-inch (610 millimeter) -long base. The turning space and clear floor or ground space may overlap.

5.3.2.2 Surface. The surface of the turning space and clear floor or ground space shall be firm and stable.

5.3.2.3 Slope. The slope of the turning space and clear floor or ground space surface shall not be steeper than 1:48 (2 percent) in all directions.

Exception: When the surface is not paved or is not elevated above the natural ground, slopes not steeper than 1:20 (5 percent) shall be permitted where necessary for drainage

5.3.3 Seats. Pit toilet seats shall comply with 5.3.3

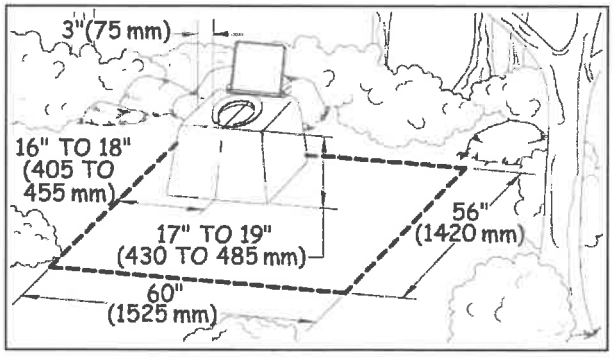

5.3.3.1 Height. The total height of the toilet seat on the riser for a pit toilet shall be between 17 inches (430 mm) and 19 inches (485 mm) above the floor or ground surface.

5.3.3.2 Location Where Walls Provided. Where walls or partitions are provided, the seat shall be positioned with a wall or partition to the rear and to one side of the seat for a left-hand or right-hand approach. The back of the riser shall be flush against the back wall. The centerline of the seat shall be 16 inches (405 mm) minimum to 18 inches (455 mm) maximum from the side wall or partition.

5.3.3.3 Location Where Walls Not Provided. Where walls or partitions are not provided, the seat shall be positioned in a corner of the clear floor or ground space required by 5.3.2 for a left-hand or right-hand approach. The back of the seat shall be flush against the perimeter of the clear floor or ground space

5.3.4 Grab Bars. Where walls or partitions are provided, grab bars complying with ABAAS section 604.5 shall be provided.

Exception: Where the walls or partitions cannot support the force specified in ABAAS section 609.8, grab bars shall not be installed. In such cases, the riser shall have vertical or nearly vertical sides and a flat area on each side of the seat that is about 3 inches (75 millimeters) wide.

5.3.5 Doors. Where provided, doors shall comply with ABAAS section 404. The door shall not swing into or otherwise obstruct the clear floor or ground space required by 5.3.2.1.

5.3.6 Entrance. The entrance to the toilet shall be level with the surrounding surface.

Exception: Where bedrock, perma-frost or other environmental conditions prohibit a level entry or the toilet design (such as a composting toilet) necessitates a raised toilet structure, a sloped entry complying with the FSTAG provisions for a trail may connect the toilet entrance with the trail or ORAR. A 60 inch by 60 inch (1,220 millimeters by 1,220 millimeters) level landing must be provided outside the door to the toilet. Sloped entries do not require handrails.

APPENDIX D: Provisions of the Architectural Barriers Act Accessibility Standards (ABAAS)

that are referenced in the FSORAG Technical Provisions

The ABAAS are available at *http://www.access-board.gov/ada-aba/aba-standards-gsa.cfm*

304 - Turning Space

304.1 General. Turning space shall comply with 304.

304.3 Size. Turning space shall comply with 304.3.1 or 304.3.2.

304.3.1 Circular Space. The turning space shall be a space of 60 inches (1525 mm) diameter minimum. The space shall be permitted to include knee and toe clearance complying with 306.

304.3.2 T-Shaped Space. The turning space shall be a T-shaped space within a 60 inch (1525 mm) square minimum with arms and base 36 inches (915 mm) wide minimum. Each arm of the T shall be clear of obstructions 12 inches (305 mm) minimum in each direction and the base shall be clear of obstructions 24 inches (610 mm) minimum. The space shall be permitted to include knee and toe clearance complying with 306 only at the end of either the base or one arm.

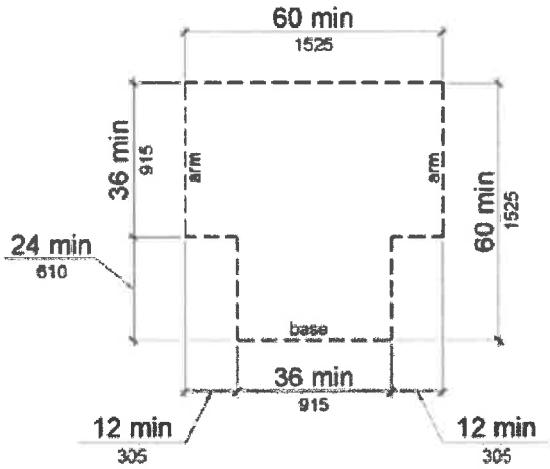

Figure 304.3.2 T-Shaped Turning Space

305 - Clear Floor or Ground Space for Wheelchairs.

305.1 General. Clear floor or ground space shall comply with 305.

305.2 Floor or Ground Surfaces. Floor or ground surfaces of a clear floor or ground space shall comply with 302. Changes in level are not permitted.

EXCEPTION: Slopes not steeper than 1:48 shall be permitted.

305.3 Size. The clear floor or ground space shall be 30 inches (760 mm) minimum by 48 inches (1220 mm) minimum.

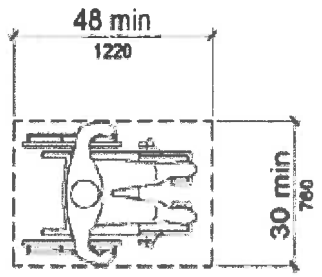

Figure 305.3 Clear Floor or Ground Space

305.4 Knee and Toe Clearance. Unless otherwise specified, clear floor or ground space shall be permitted to include knee and toe clearance complying with 306.

305.5 Position. Unless otherwise specified, clear floor or ground space shall be positioned for either forward or parallel approach to an element.

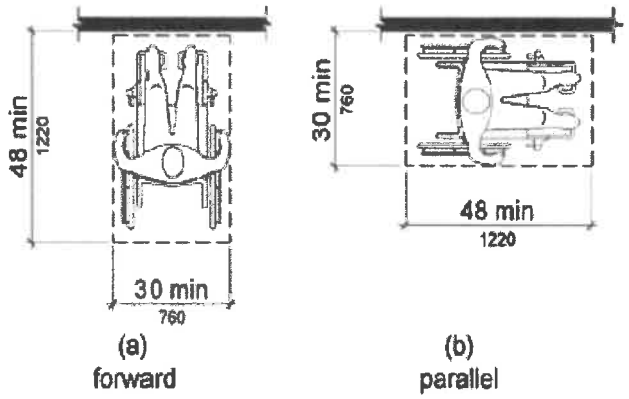

Figure 305.5 Position of Clear Floor or Ground Space

305.6 Approach. One full unobstructed side of the clear floor or ground space shall adjoin an accessible route or adjoin another clear floor or ground space.

305.7 Maneuvering Clearance. Where a clear floor or ground space is located in an alcove or otherwise confined on all or part of three sides, additional maneuvering clearance shall be provided in accordance with 305.7.1 and 305.7.2.

305.7.1 Forward Approach. Alcoves shall be 36 inches (915 mm)wide minimum where the depth exceeds 24 inches (610 mm).

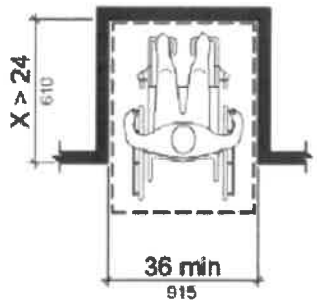

Figure 305.7.1 Maneuvering Clearance in an Alcove, Forward Approach

305.7.2 Parallel Approach. Alcoves shall be 60 inches (1525 mm) wide minimum where the depth exceeds 15 inches (380 mm).

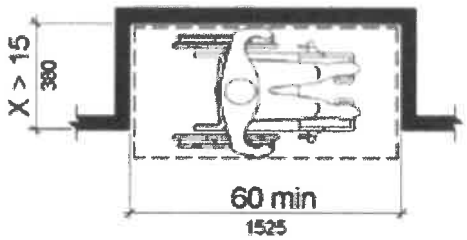

Figure 305.7.2 Maneuvering Clearance in an Alcove, Parallel Approach

306 Knee and Toe Clearance

306.1 General. Where space beneath an element is included as part of clear floor or ground space or turning space, the space shall comply with 306. Additional space shall not be prohibited beneath an element but shall not be considered as part of the clear floor or ground space or turning space.

Advisory 306.1 General. Clearances are measured in relation to the usable clear floor space, not necessarily to the vertical support for an element. When determining clearance under an object for required turning or maneuvering space, care should be taken to ensure the space is clear of any obstructions.

306.2 Toe Clearance.

306.2.1 General. Space under an element between the finish floor or ground and 9 inches (230 mm) above the finish floor or ground shall be considered toe clearance and shall comply with 306.2.

306.2.2 Maximum Depth. Toe clearance shall extend 25 inches (635 mm) maximum under an element.

306.2.3 Minimum Required Depth. Where toe clearance is required at an element as part of a clear floor space, the toe clearance shall extend 17 inches (430 mm) minimum under the element.

306.2.4 Additional Clearance. Space extending greater than 6 inches (150 mm) beyond the available knee clearance at 9 inches (230 mm) above the finish floor or ground shall not be considered toe clearance.

306.2.5 Width. Toe clearance shall be 30 inches (760 mm) wide minimum.

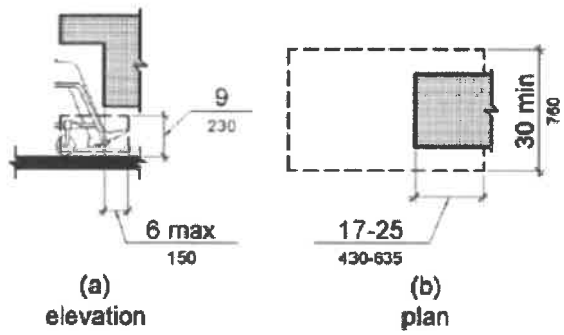

Figure 306.2 Toe Clearance

306.3 Knee Clearance.

306.3.1 General. Space under an element between 9 inches (230 mm) and 27 inches (685 mm) above the finish floor or ground shall be considered knee clearance and shall comply with 306.3.

306.3.2 Maximum Depth. Knee clearance shall extend 25 inches (635 mm) maximum under an element at 9 inches (230 mm) above the finish floor or ground.

306.3.3 Minimum Required Depth. Where knee clearance is required under an element as part of a clear floor space, the knee clearance shall be 11 inches (280 mm) deep minimum at 9 inches (230 mm) above the finish floor or ground, and 8 inches (205 mm) deep minimum at 27 inches (685 mm) above the finish floor or ground.

306.3.4 Clearance Reduction. Between 9 inches (230 mm) and 27 inches (685 mm) above the finish floor or ground, the knee clearance shall be permitted to reduce at a rate of 1 inch (25 mm) in depth for each 6 inches (150 mm) in height.

306.3.5 Width. Knee clearance shall be 30 inches (760 mm) wide minimum.

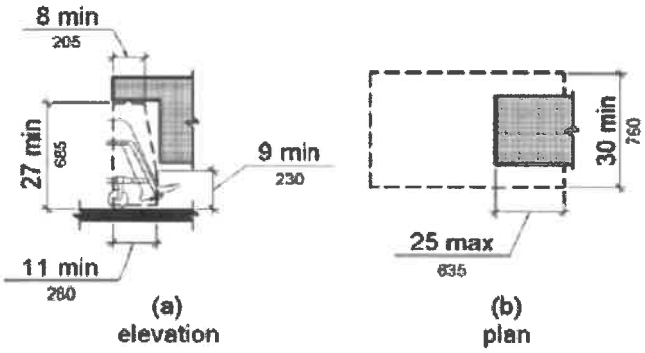

Figure 306.3 Knee Clearance

308 Reach Ranges

308.1 General. Reach ranges shall comply with 308.

308.2 Forward Reach.

308.2.1 Unobstructed. Where a forward reach is unobstructed, the high forward reach shall be 48 inches (1220 mm) maximum and the low forward reach shall be 15 inches (380 mm) minimum above the finish floor or ground.

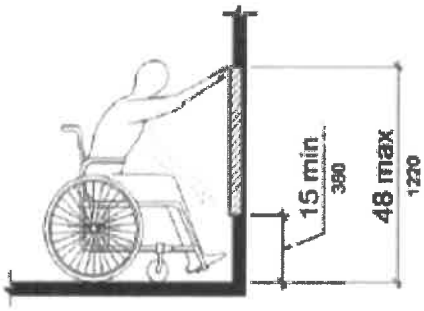

Figure 308.2.1 Unobstructed Forward Reach

308.2.2 Obstructed High Reach. Where a high forward reach is over an obstruction, the clear floor space shall extend beneath the element for a distance not less than the required reach depth over the obstruction. The high forward reach shall be 48 inches (1220 mm) maximum where the reach depth is 20 inches (510 mm) maximum. Where the reach depth exceeds 20 inches (510 mm), the high forward reach shall be 44 inches (1120 mm) maximum and the reach depth shall be 25 inches (635 mm) maximum.

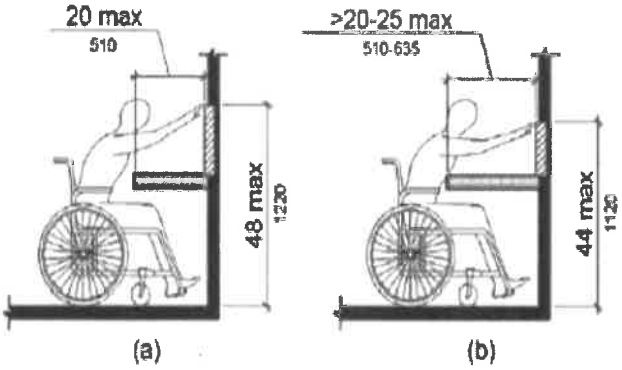

Figure 308.2.2 Obstructed High Forward Reach

308.3 Side Reach.

308.3.1 Unobstructed. Where a clear floor or ground space allows a parallel approach to an element and the side reach is unobstructed, the high side reach shall be 48 inches (1220 mm) maximum and the low side reach shall be 15 inches (380 mm) minimum above the finish floor or ground.

EXCEPTIONS: 1. An obstruction shall be permitted between the clear floor or ground space and the element where the depth of the obstruction is 10 inches (255 mm) maximum.
2. Operable parts of fuel dispensers shall be permitted to be 54 inches (1370 mm) maximum measured from the surface of the vehicular way where fuel dispensers are installed on existing curbs.

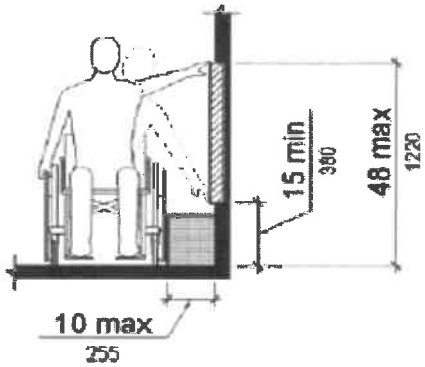

Figure 308.3.1 Unobstructed Side Reach

308.3.2 Obstructed High Reach. Where a clear floor or ground space allows a parallel approach to an element and the high side reach is over an obstruction, the height of the obstruction shall be 34 inches (865 mm) maximum and the depth of the obstruction shall be 24 inches (610 mm) maximum. The high side reach shall be 48 inches (1220 mm) maximum for a reach depth of 10 inches (255 mm) maximum. Where the reach depth exceeds 10 inches (255 mm), the high side reach shall be 46 inches (1170 mm) maximum for a reach depth of 24 inches (610 mm) maximum.

EXCEPTIONS: 1. The top of washing machines and clothes dryers shall be permitted to be 36 inches (915 mm) maximum above the finish floor.
2. Operable parts of fuel dispensers shall be permitted to be 54 inches (1370 mm) maximum measured from the surface of the vehicular way where fuel dispensers are installed on existing curbs.

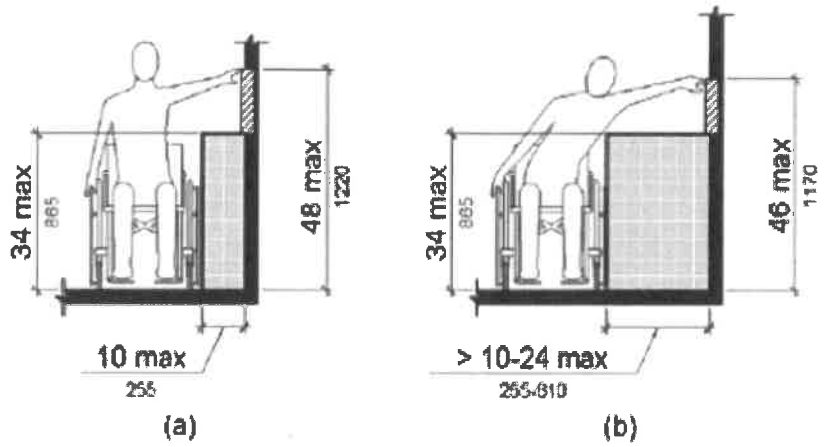

Figure 308.3.2 Obstructed High Side Reach

309 Operable Parts

309.1 General. Operable parts shall comply with 309.

309.2 Clear Floor Space. A clear floor or ground space complying with 305 shall be provided.

309.3 Height. Operable parts shall be placed within one or more of the reach ranges specified in 308.

309.4 Operation. Operable parts shall be operable with one hand and shall not require tight grasping, pinching, or twisting of the wrist. The force required to activate operable parts shall be 5 pounds (22.2 N) maximum.

> **EXCEPTION**: Gas pump nozzles shall not be required to provide operable parts that have an activating force of 5 pounds (22.2 N) maximum.

404 Doors, Doorways, and Gates

404.2.3 Doorways - Clear Width. Door openings shall provide a clear width of 32 inches (815 mm) minimum. Clear openings of doorways with swinging doors shall be measured between the face of the door and the stop, with the door open 90 degrees. Openings more than 24 inches (610 mm) deep shall provide a clear opening of 36 inches (915 mm) minimum. There shall be no projections into the required clear opening width lower than 34 inches (865 mm) above the finish floor or ground. Projections into the clear opening width between 34 inches (865 mm) and 80 inches (2030 mm) above the finish floor or ground shall not exceed 4 inches (100 mm).

> **EXCEPTIONS**: 1. In alterations, a projection of 5/8 inch (16 mm) maximum into the required clear width shall be permitted for the latch side stop.
> 2. Door closers and door stops shall be permitted to be 78 inches (1980 mm) minimum above the finish floor or ground.

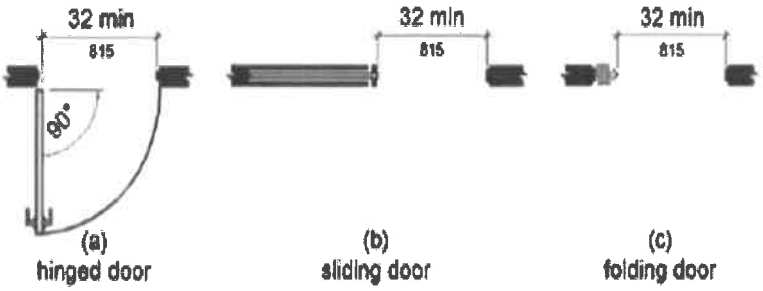

Figure 404.2.3 Clear Width of Doorways

404.2.7 Door and Gate Hardware. Handles, pulls, latches, locks, and other operable parts on doors and gates shall comply with 309.4. Operable parts of such hardware shall be 34 inches (865 mm) minimum and 48 inches (1220 mm) maximum above the finish floor or ground. Where sliding doors are in the fully open position, operating hardware shall be exposed and usable from both sides.

APPENDIX C

Public Surveys.

APPENDIX C

Lake Antoine Park Survey Results

Background Information and Demographics

A Total 356 surveys were given to individuals who had camped or rented a pavilion at Lake Antione Park in the summer of 2019. Only 45 surveys had been returned for a response rate of 12.33%. Participants were asked to respond to the following questions.

1. Was this your first visit or are you a repeat visitor?
2. Did you rent a pavilion?
3. Number of Adults in your party?
4. Number of Children in your party?
5. How many days annually do you spend camping at Lake Antione Park?
6. How many days annually do you spend visiting Lake Antione Park?
7. Rating of Campground: 1= Strongly Disagree, 2= Disagree, 3=Agree, 4= Strongly Agree
    a. Concerns addressed in a timely manner
    b. Camp Host was easily identified
    c. Campground offered adequate recreational opportunities for children
    d. Campground was safe and secure
    e. Campsite was appropriate for my camper or tent
    f. Campsite was well maintained
    g. Campsite was clearly marked
    h. Electrical service to my campsite was adequate
    i. Restrooms/Shower Building was clean and well maintained
    j. Reservations were easy to make
8. Suggested Improvements/Upgrades to Lake Antione Park: Rate 1 (most) to 8 (least)
    a. Restroom/Shower upgrade
    b. ADA accessibility to park features
    c. Access to Wi-Fi
    d. Water on Campsites
    e. Laundry facilities
    f. Electrical Service upgrades
    g. Additional pavilions
    h. Willing to pay a higher rate for improvements
9. Comments

Results:

1. 41 Repeat visitors, 4 New Visitors

2. 42 Campers, 3 Pavilion Rentals
3. Average number of Adults 3.8
4. Average number of Children 2.75
5. Average of 6.5 Days
6. Average of 9.33 Days
7. Average of Campground Rating "a" through "i".
   a. 3.09
   b. 2.4
   c. 3.2
   d. 3
   e. 3.25
   f. 2.85
   g. 2.77
   h. 2.9
   i. 2.25
   j. 2.9
8. Rating from 8 items. 1 is most 8 is least in numerical order
   a. Restroom/Shower Upgrade
   b. Electrical Service Upgrade
   c. Water on Campsites
   d. Access to Wi-Fi
   e. ADA accessibility to park features
   f. Laundry facility
   g. Additional pavilions
   h. Willing to pay a higher rate for improvements
9. Comments
   - Bathhouse needs to be updated (5 comments)
   - The on-line reservation system was not user friendly (3 comments)
   - We love camping here, we have been coming here for years
   - We were here last year and the power went out for a short time, it did not this year.
   - We like the new children playground set by the beach.
   - The wall looks great, brings back memories (2 comments)
   - We enjoyed the movies night, and they were free!
   - More items need to be in the store such as ice cream, hotdogs, etc.
   - We hold our company picnic here each year and we are very happy with the improvements to the park and staff is very helpful.
   - Some noise late at night from a few campsites.
   - Camp Host was not easy to find, but once we did find him, he was very helpful.
   - Full service includes water, sewer and sometimes cable or wi-fi your campsites are not full service

APPENDIX D

Notices

Dickinson County Recreation Plan

Proposed amendments have been made to the Dickinson County Recreation Plan 2020 – 2024. The amendments can be viewed starting February 18th on the county website, dickinsoncountymi.gov or by contacting the Controller's Office at 906-774-2573. A Public Hearing will be held for input on the amendments on March 23, 2020 at 6pm during the County Board meeting at the Dickinson County Courthouse.

Dickinson County Recreation Plan

The final draft of the Dickinson County Recreation Plan 2020 – 2024 can be viewed starting May 19th on the county website, dickinsoncountymi.gov or by contacting the Controller's Office at 906-774-2573. The Recreation Plan will be voted on at the next County Board meeting, May 26th, 2020 at 6pm. Please visit the Dickinson County website for meeting details.

Newspaper Clippings

APPENDIX E

Meeting Minutes and Resolution of Adoption

To Be Added Once Approved

APPENDIX F

Letters of Transmittal

To be included once Recreation Plan is passed by County Board